

Order number: 381XMT-VAR-5W-100-L
Manufacturer: Briefkasten Manufaktur Lippe

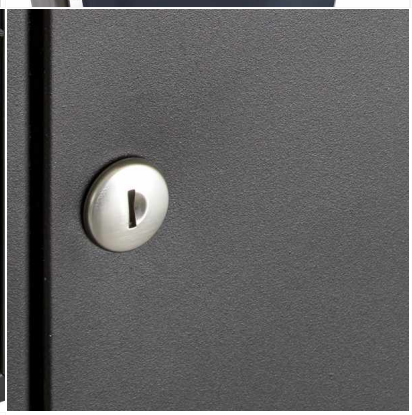
ab **€2,495.00 ***

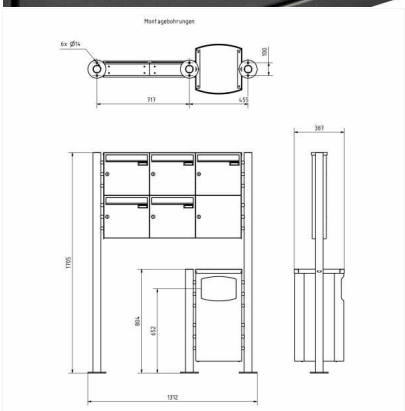
incl. VAT plus shipping costs (exclusive of VAT for logged-in users with VAT ID and Non-EU countries)




WERKE
Mobilität



RESTMÜLL

Montagebohrungen
6x Ø14
300
717
1795
387
1312

5-compartment 2x3 stainless steel free-standing letterbox Design BASIC Plus 381X ST-R with waste garbage can - RAL of your choice

Modern free-standing letterbox for 5 parties - made in Germany by Briefkasten Manufaktur.
The complete mailbox system is made of weather-resistant stainless steel V2A 1.4301, the mailboxes and the waste garbage can are powder coated in RAL color of your choice. The very high quality workmanship and the sophisticated concept make this free-standing letterbox our top seller. A rain drainage edge for optimal water protection, a continuous rubber lip for quiet insertion, the solid interchangeable name plate, a practical mail holding bracket and the very robust lock distinguish this free-standing letterbox. The side panel with protruding rain cover made of stainless steel V2A, powder-coated in RAL color offers optimal protection against weather and guarantees a very high durability. The letterbox is complemented by a waste garbage can with elegant round tube stand elements. The dimensions allow a capacity of about 45 liters, the opening guarantees convenient insertion of waste. Due to the well thought-out waste bag removal, the waste garbage can is designed without visible screw connections and rivets.
The letterboxes of the BASIC Plus collection are characterized by the consistent use of stainless steel V2A. The result is very high durability and sustainability. The construction has been developed by our own engineers with regard to high flexibility or modularity, easy spare parts assembly and uncomplicated self-assembly. Spare parts are directly available for all BASIC Plus units.

• **5-compartment free-standing letterbox made of stainless steel V2A 1.4301, the letterboxes and the waste garbage can are powder coated in RAL color**
• The system is made at Briefkasten Manufaktur. German quality production "Made in Germany".
• The mailboxes comply with DIN/EN 13724. Insertion size (3.5 cm x 32.5 cm) for C4 crosswise, here fit even large letters without bending.
• Insertion flap with noise-damping rubber seal for very quiet insertion of mail.
• The door can be opened from left to right.
• Incl. 2 keys with key number, changeable name plate (type 2) under the access flap and mail retainer.
• Large capacity due to optional mailbox depth +50 mm = approx. 17 l. Suitable for companies and households with very large mail volumes.
• Incl. side cover + rain cover made of stainless steel V2A, powder coated in RAL color.
• Waste garbage can - waste garbage can made of stainless steel V2A 1.4301, powder coated in RAL color.
• Capacity of approx. 45 liters, the opening (270mm x 180mm) guarantees convenient insertion of waste.
• Simple and easy change of the plastic bag: unlock and remove the cover plate, remove the front plate, change the plastic bag.
• The stand elements are made of 60.3mm V2A stainless steel, ground for screw mounting or setting in concrete.

Important information:
The mail is only protected from moisture and dirt when fully inserted and the flap is closed. In certain extreme weather conditions, water can still enter (according to DIN EN 13724 up to 1ccm). This is not a reason for complaint.

Abmessungen & Details

Number of parties:	5
Item withdrawal:	Front
Base material:	Stainless steel
Height single box in cm:	33,0
Width single box in cm:	35,5
Volume single box in liters:	BK 12.0 | BK 17.0 | FROM 45.0
Height letter slot in cm:	3,5
Width letter slot in cm:	32,5
Height letterbox system in cm:	66,0
Width letterbox system in cm:	106,5
Overall height in cm:	170,0
Total width in cm:	124,5
Depth in cm:	BK 10.0 | BK 15.0 | FROM 38.0
Weight in kg:	66,0
Delivery condition:	Delivery is made in blocks, stand elements / letterbox divided
Shipping information:	Depending on the order volume, delivery is made by parcel shipment or bulky goods shipment. Partial deliveries are possible for products that can be disassembled (e.g., for floor-standing mailboxes, the stand & box can be shipped separately).