8-unit (4x2) freestanding mailbox system Design BASIC 385-9016 ST-R - RAL 9016 Traffic White | RAL 9016 Traffic White, fine-textured matt | 300x110x385 mm (WxHxD) - ?? Normal 12 litres | with 8 mailboxes



Product number 385-9016-8W

Product description

Freestanding 8-unit mailbox system BASIC 385 for 8 households – wide, multi-column configuration – RAL 9016 Traffic White

With 8 separately usable compartments, the freestanding BASIC 385 offers a clear mail solution for multi-family houses, residential complexes and commercially used properties. The freestanding installation allows flexible positioning where the unit is easily accessible to residents and postal carriers.

The W configuration distributes the mailboxes in a wider, multi-column layout and creates a clear front for multiple users.

The mailboxes are made from galvanised steel and receive a powder coating in RAL 9016 Traffic White fine-textured matt. A close-fitting side cladding with an integral rain canopy unites the individual mailboxes into a single enclosed unit.

Each compartment features a slot of 35 × 265 mm for DIN C4 items in portrait orientation. A noise-damping rubber lip reduces impact noise, while the front access doors open from left to right. Each mailbox is supplied with two keys with key number and a replaceable nameplate beneath the mail slot.

The advantages of the BASIC 385 at a glance

Solid stainless-steel support posts

Round-tube support posts with approx. 60 mm diameter made from brushed stainless steel V2A 1.4301 provide a stable base for the freestanding mailbox system. The robust construction is designed for long-term use at the property entrance.

Briefkasten Manufaktur Lippe GmbH
Werler Straße 60
32105 Bad Salzuflen

www.briefkasten-manufaktur.de
info@briefkasten-manufaktur.de
Tel.: +49 5222 807110

Geschäftsführer Oliver Woineck
Ust.ID.Nr. DE303690847
Handelsregister Amtsgericht Lemgo, HRB 8618

Large mail slot according to DIN EN 13724

The slot measuring 35 × 265 mm is designed for DIN C4 items in portrait orientation. Larger envelopes can also be deposited without folding.

Quiet deposit and convenient retrieval

A noise-damping rubber lip reduces the slamming of the flaps. Mail is retrieved from the front via doors that open from left to right.

Bright surface in RAL 9016

RAL 9016 Traffic White fine-textured matt provides a clear, bright appearance and permanently protects the galvanised steel construction.

Proven BASIC quality Made in Germany

The combination of solid material selection, mailboxes compliant with DIN EN 13724 and an installation-friendly design makes the BASIC 385 a durable solution for daily use.

Equipment of the BASIC 385 mailbox system

Mailbox system

Configuration Wide, multi-column configuration
Number of mailboxes 8 separately usable compartments
Material of mailboxes Galvanised steel
Finish RAL 9016 Traffic White fine-textured matt
Rain canopy / side cladding Galvanised steel, powder-coated in RAL 9016 Traffic White fine-textured matt
Manufacture Made in Germany by Briefkasten Manufaktur Lippe

Mail and operation

Mail slot 35 × 265 mm, suitable for DIN C4 portrait
Flaps With noise-damping rubber lip
Mail retrieval From the front
Door opening Left to right
Keys 2 keys with key number per mailbox
Nameplate Replaceable nameplate beneath the mail slot
Standard Mailboxes conforming to DIN EN 13724

Support posts and fittings

Support posts Round tube approx. 60 mm in stainless steel V2A 1.4301, brushed
Installation methods Either screw-mounted or to be concreted in
Fixings Anchor bolts for screw mounting not included; select suitable anchors for the foundation separately

Mailbox size and volume

The BASIC 385 is available with different mailbox sizes depending on product configuration. The standard version 300 × 110 × 385 mm provides approx. 12 litres of volume; depending on the variant, 300 × 220 × 385 mm with approx. 25 litres of volume is also available.

Mounting by concreting

For the freestanding unit we recommend a suitably sized concrete foundation. When concreting in, the stainless-steel support posts must be aligned plumb and permanently anchored in the foundation. Foundation size and embedment depth should be matched to ground conditions, unit weight and local circumstances.

Screw mounting on a foundation

Screw mounting requires a flat, load-bearing concrete foundation. Suitable anchor bolts or fixings must be selected to suit the substrate and the load on the unit. For the BASIC-385-ST-R variants, anchor bolts are not included in the standard scope of delivery.

Note on weather protection

Posted items are best protected from moisture and soiling only when fully inserted and with the flap closed. Protruding items can prevent the flap from fully closing. Under extreme weather conditions, moisture may enter the mailbox despite compliant construction.

Product properties

Material	Steel, galvanised, Stainless steel V2A 1.4301
Surface/colour	RAL 9005 deep black, RAL 3004 crimson red, DB 703 iron mica, RAL 7016 anthracite grey, RAL of your choice (according to colour table), Brushed, RAL 9007 grey aluminium, RAL 9016 traffic white
Series	BASIC
Boxes by volume	Normal > 10 litres
Name labelling	Nameplate
Mounting type	Free-standing
Removal of mail	On the front
Number of boxes	with 8 letterboxes

Briefkasten Manufaktur Lippe GmbH
Werler Straße 60
32105 Bad Salzuflen

www.briefkasten-manufaktur.de
info@briefkasten-manufaktur.de
Tel.: +49 5222 807110

Geschäftsführer Oliver Woineck
Ust.ID.Nr. DE303690847
Handelsregister Amtsgericht Lemgo, HRB 8618

Dimensions

Height of single box in mm	110.0
Width of single box in mm	300.0
Capacity in litres	12
Height of letterbox slot in mm	35.0
Width of letter slot in mm	265.0
Height of letterbox in mm	440.0
Width of letterbox system in mm	600.0
Overall height in mm	1200.0 | 1500.0 | 1700.0
Total width in mm	765.0
Depth in mm	435.0
Weight in kg	47
Delivery condition	Delivery is made in blocks, stand elements / mailbox supplied separately.

Dimension drawing

Briefkasten Manufaktur Lippe GmbH
Werler Straße 60
32105 Bad Salzuflen

www.briefkasten-manufaktur.de
info@briefkasten-manufaktur.de
Tel.: +49 5222 807110

Geschäftsführer Oliver Woineck
Ust.ID.Nr. DE303690847
Handelsregister Amtsgericht Lemgo, HRB 8618

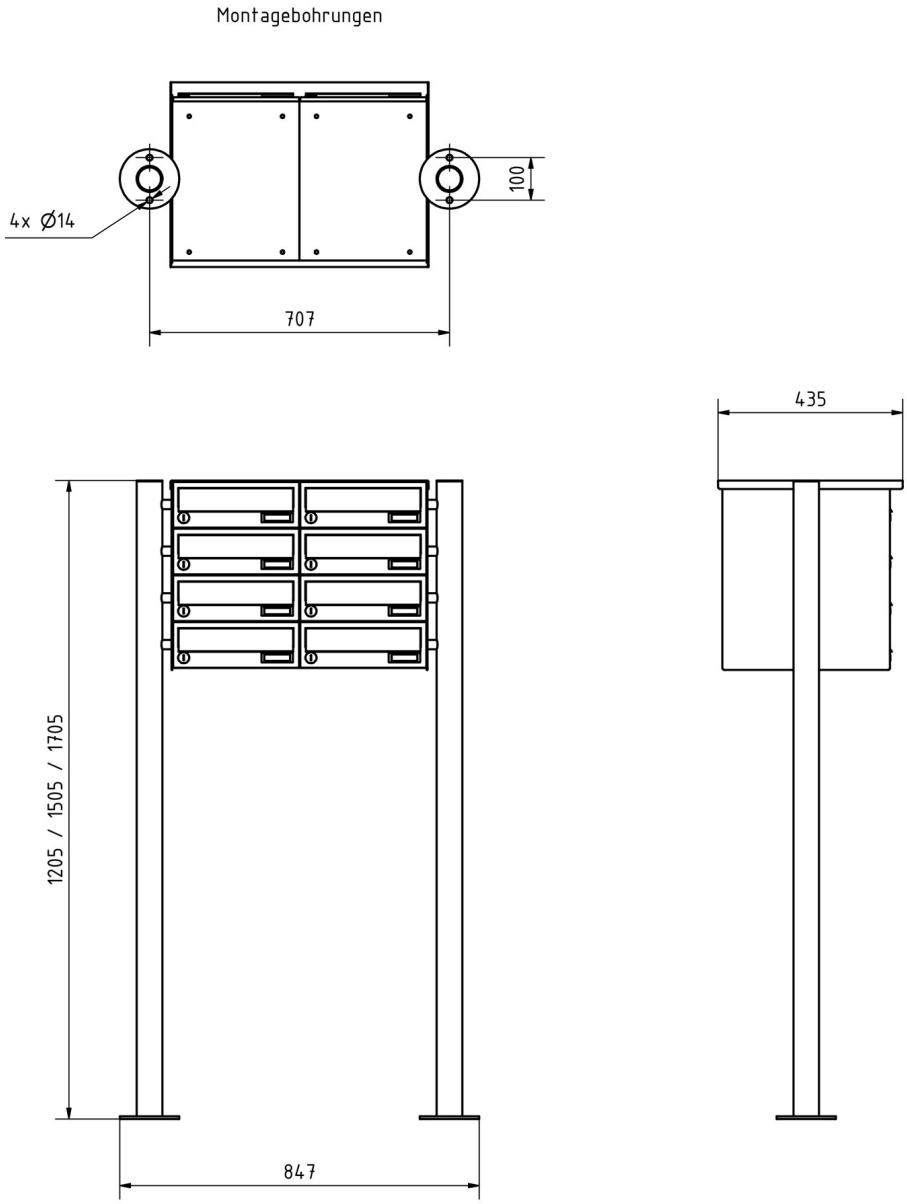

Briefkasten Manufaktur Lippe GmbH
Werler Straße 60
32105 Bad Salzuflen

www.briefkasten-manufaktur.de
info@briefkasten-manufaktur.de
Tel.: +49 5222 807110

Geschäftsführer Oliver Woineck
Ust.ID.Nr. DE303690847
Handelsregister Amtsgericht Lemgo, HRB 8618

More images









Briefkasten Manufaktur Lippe GmbH
Werler Straße 60
32105 Bad Salzuflen

www.briefkasten-manufaktur.de
info@briefkasten-manufaktur.de
Tel.: +49 5222 807110

Geschäftsführer Oliver Woineck
Ust.ID.Nr. DE303690847
Handelsregister Amtsgericht Lemgo, HRB 8618



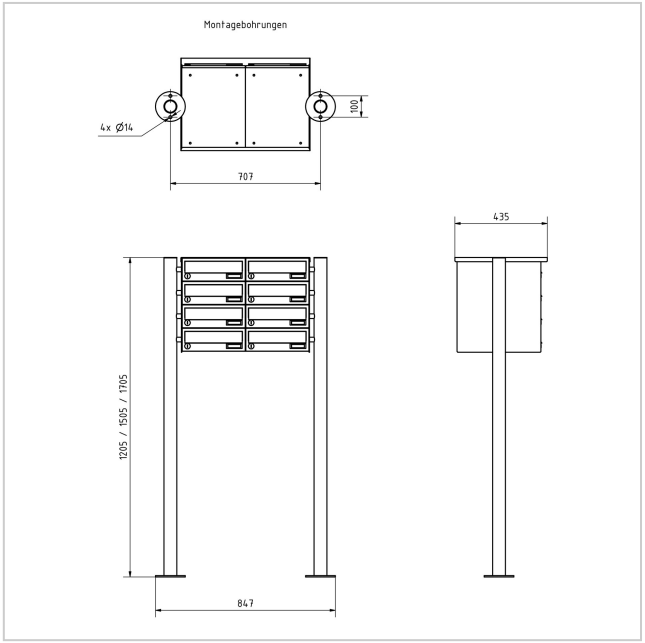

Briefkasten Manufaktur Lippe GmbH
Werler Straße 60
32105 Bad Salzuflen

www.briefkasten-manufaktur.de
info@briefkasten-manufaktur.de
Tel.: +49 5222 807110

Geschäftsführer Oliver Woineck
Ust.ID.Nr. DE303690847
Handelsregister Amtsgericht Lemgo, HRB 8618