# 12-compartment BASIC letterbox system – flush-mounted – choice of RAL colour

**Product number** BML3D-AT7DNVQ23U

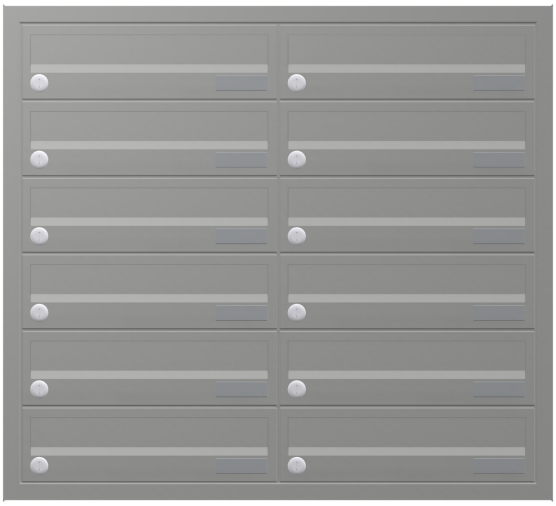

## Product description

## Welcoming design and convenient everyday mail delivery

The BASIC Horizontal system from Briefkasten Manufaktur welcomes you and your visitors with a clean, uncluttered design. Its modular construction brings your chosen functions together in a clearly arranged, customisable solution for everyday use. The BASIC series offers letterboxes, accessory boxes and functional modules that can be combined in a variety of ways for a coordinated entrance area. The system is designed for flush mounting and provides 12 letterboxes for daily mail.

The system is finished in your choice of RAL colour and has overall dimensions of W 791 × H 716 × D 394 mm.

Select “Configure now” to open this exact configuration in the 3D configurator. You can then customise the system further and place your order.

### Individually configurable

Design your letterbox system to suit your home: select “Configure now” to adapt this configuration to your requirements.

- Box finish: adjust the colour in the 3D configurator using the colours available for this version.
- Personalised lettering: customise the designated areas with your own names, house numbers or preferred text. Any lettering shown is an example and can be replaced.
- Lettering style: choose from the fonts available for lettering and adjust the appearance in the configurator.
- Features: add or change compatible components from the selection available for the system.

When you make individual changes, the dimensions and price are recalculated in the 3D configurator to reflect your selection.

### Plaster trim frame

Briefkasten Manufaktur Lippe GmbH
Werler Straße 60
32105 Bad Salzuflen

www.briefkasten-manufaktur.de
info@briefkasten-manufaktur.de
Tel.: +49 5222 807110

Geschäftsführer Oliver Woineck
Ust.ID.Nr. DE303690847
Handelsregister Amtsgericht Lemgo, HRB 8618

The flush-mounted system is fitted with a plaster trim frame made from 1,5 mm thick V2A stainless steel. The frame covers the transition between the installation opening and the wall surface, providing a neat finish.

### Materials and workmanship

Base material: V2A 1.4301 stainless steel. The V2A stainless steel provides a corrosion-resistant, durable foundation for the entrance area.

The powder-coated surface is finished in your choice of RAL colour. Select your preferred colour in the 3D configurator.

### Letterbox and ease of use

Letterbox 370 × 110 × 385 mm: includes a rain drainage edge for optimum protection against water, a continuous rubber lip for quiet mail delivery, a sturdy replaceable nameplate and a highly robust lock. The height of the letter slot and the narrowing of the chute help protect mail against unauthorised removal.

### Features

BASIC Type 2 plastic nameplate: made from crystal-clear polycarbonate. The insert can be replaced from the front.

### Features of this letterbox system

- Product range: BASIC Horizontal
- Mounting: flush mounting
- Finish: choice of RAL colour
- Overall dimensions: W 791 × H 716 × D 394 mm
- 12 letterboxes
- Box finish: choice of RAL colour
- Base material: V2A 1.4301 stainless steel. Finish: powder coating or brushed stainless steel

**Important information:**

Water protection: a sheltered location, preferably under a canopy, helps protect your mail. Mail should be inserted fully and the letter flap kept closed.

Installation: check the mounting surface and installation conditions against the overall dimensions and installation instructions.

## Product properties

| | |
|---|---|
| **Series** | BASIC |
| **Name labelling** | Nameplate |
| **Material** | Stainless steel V2A 1.4301 |
| **Removal of mail** | On the front |
| **Surface/colour** | RAL of your choice (according to colour table) |
| **Mounting type** | Flush-mounted |
| **Number of boxes** | with 12 letterboxes |

Briefkasten Manufaktur Lippe GmbH
Werler Straße 60
32105 Bad Salzuflen

www.briefkasten-manufaktur.de
info@briefkasten-manufaktur.de
Tel.: +49 5222 807110

Geschäftsführer Oliver Woineck
Ust.ID.Nr. DE303690847
Handelsregister Amtsgericht Lemgo, HRB 8618

# Dimensions

| | |
|---|---|
| **Height of single box in mm** | 110 |
| **Width of single box in mm** | 370 |
| **Overall height in mm** | 716 |
| **Total width in mm** | 791 |
| **Depth in mm** | 394 |

## Dimension drawing

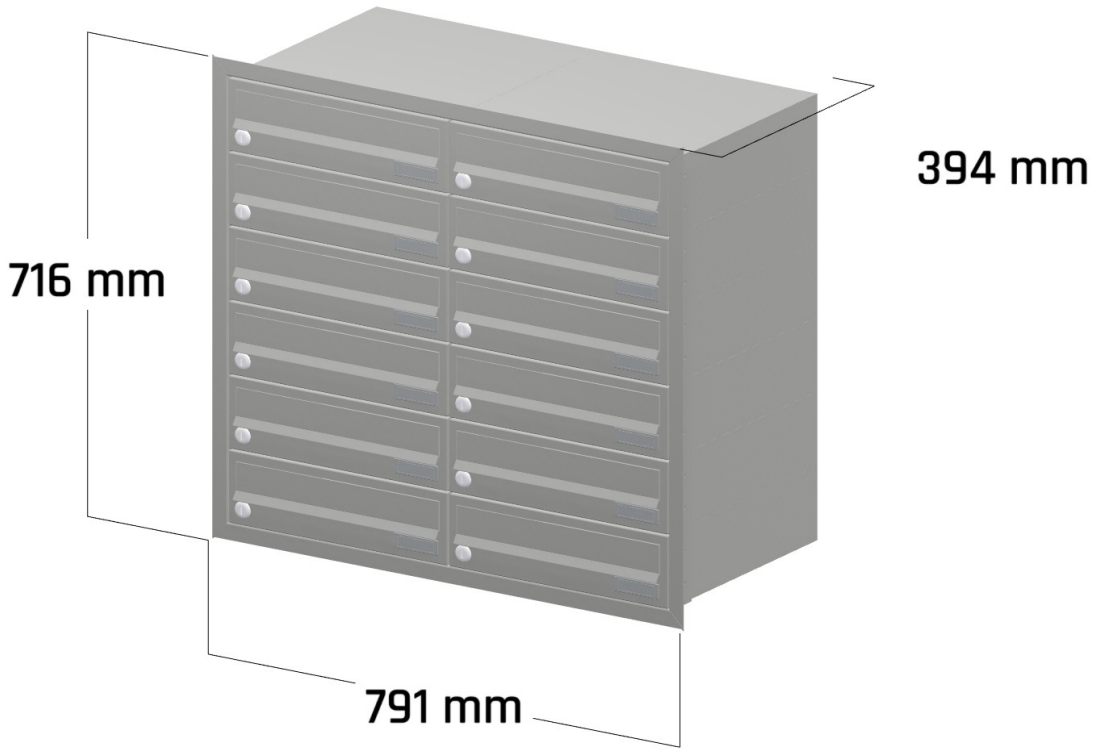


Briefkasten Manufaktur Lippe GmbH
Werler Straße 60
32105 Bad Salzuflen

www.briefkasten-manufaktur.de
info@briefkasten-manufaktur.de
Tel.: +49 5222 807110

Geschäftsführer Oliver Woineck
Ust.ID.Nr. DE303690847
Handelsregister Amtsgericht Lemgo, HRB 8618

# More images



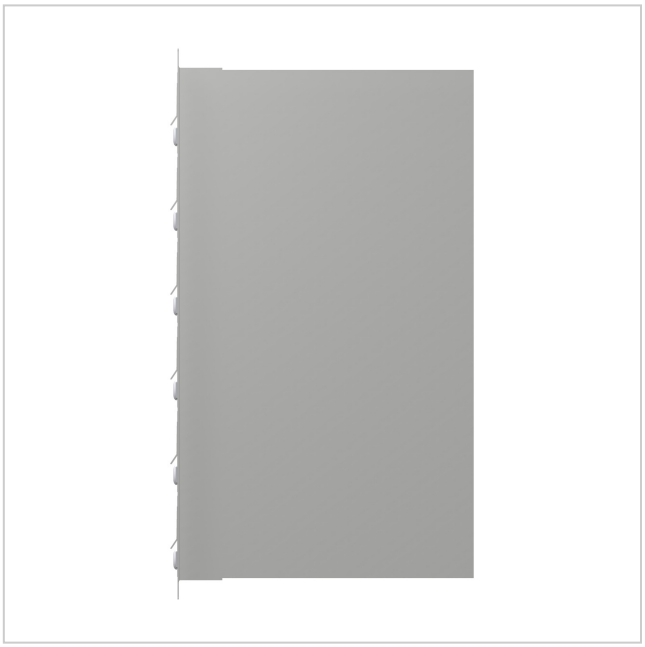

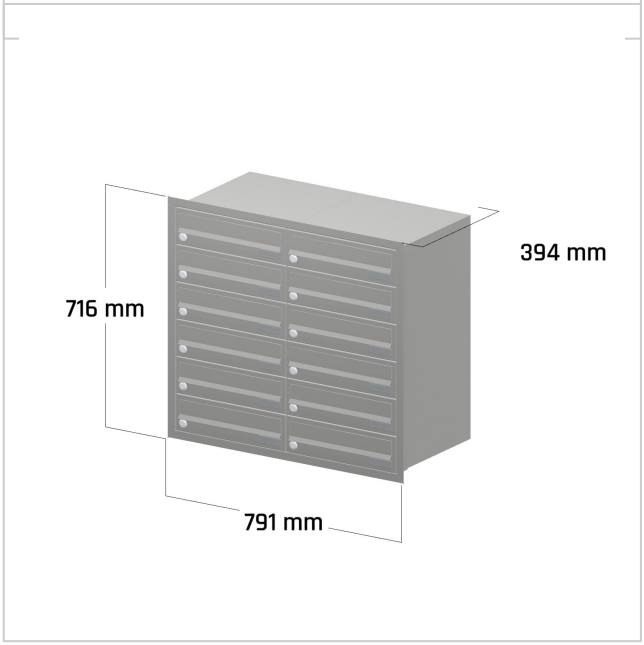


Briefkasten Manufaktur Lippe GmbH
Werler Straße 60
32105 Bad Salzuflen

www.briefkasten-manufaktur.de
info@briefkasten-manufaktur.de
Tel.: +49 5222 807110

Geschäftsführer Oliver Woineck
Ust.ID.Nr. DE303690847
Handelsregister Amtsgericht Lemgo, HRB 8618