4-compartment BASIC letterbox system with 4 parcel boxes – bell and intercom provision – freestanding installation – choice of RAL colour



Product number BML3D-NWQQ66N9YW

Product description

Letterbox system with parcel reception – thoughtful design for your entrance

The BASIC Horizontal system from Briefkasten Manufaktur welcomes you and your visitors with a clean, uncluttered design. Its modular construction brings your chosen functions together in a clearly arranged solution that can be tailored to your everyday needs. The BASIC series offers versatile combinations of letterboxes, accessory boxes and function boxes for a coordinated entrance area. The system is designed for freestanding installation and provides 4 letterboxes for daily post. It incorporates 4 parcel boxes for parcel deliveries. The equipment includes 4 bell push buttons with integrated call buttons.

The system is finished in your choice of RAL colour and has overall dimensions of W 859 × H 1520 × D 430 mm.

Select “Configure now” to open this exact configuration in the 3D configurator. You can then customise the system further and place your order.

Individually configurable

Design your letterbox system to suit your home: select “Configure now” to tailor this configuration to your requirements.

Briefkasten Manufaktur Lippe GmbH
Werler Straße 60
32105 Bad Salzuflen

www.briefkasten-manufaktur.de
info@briefkasten-manufaktur.de
Tel.: +49 5222 807110

Geschäftsführer Oliver Woineck
Ust.ID.Nr. DE303690847
Handelsregister Amtsgericht Lemgo, HRB 8618

- Support posts in a suitable length: choose from the post lengths available for your installation requirements. You can change the length shown.
- Support post shape: choose from the post shapes and versions available for this system.
- Colour of support posts and attachments: coordinate the available finishes with the boxes and your entrance area.
- Fixing: choose a support post mounting option available for this configuration that suits the mounting surface.
- Box finish: customise the colour in the 3D configurator using the colours available for this version.
- Personalised lettering: add your own names, house numbers or preferred text to the designated areas. Any lettering shown is an example and can be replaced.
- Lettering style: choose from the available fonts and adjust the appearance in the configurator.
- Backlit lettering can be configured on the designated areas of this system.
- Equipment: add or change compatible components from the selection available for this system.

When you make individual changes, the dimensions and price are recalculated in the 3D configurator to match your selection.

Robust cladding and thoughtful weather protection

The rain canopy made from 1,5 mm thick V2A 1.4301 stainless steel complements the built-in weather protection: it shields the top and helps keep rain away from the front.

The side cladding made from 1,5 mm thick V2A 1.4301 stainless steel protects the sides and gives the system a robust, visually enclosed finish.

Additional space for parcels, newspapers and more

Used as a parcel box, this compartment complements letter reception by accepting parcels even when you are not at home. The selected BASIC series parcel lock with T-handle allows deliveries without giving the courier a key. You use your key to release the compartment for a single delivery. The courier opens the released compartment, places the parcel inside, closes the door and pushes the lock in to secure it. To retrieve your parcel, open the compartment with your key, then release it again for the next delivery. Until then, it is unavailable for further keyless deliveries. The external box dimensions are 370 × 440 × 385 mm (W × H × D). The clear door opening and usable internal dimensions determine which parcel sizes will fit; the external dimensions do not indicate the maximum parcel size. Please check the parcel size against the compartment's internal dimensions beforehand.

Materials and workmanship

Base material: V2A 1.4301 stainless steel. The V2A stainless steel provides a corrosion-resistant, durable foundation for your entrance area.

The powder-coated finish is available in your choice of RAL colour. Select your preferred colour in the 3D configurator.

Letterbox and ease of use

Letterbox 370 × 110 × 385 mm: includes a rain drainage edge for optimum water protection, a continuous rubber lip for quiet posting, a sturdy nameplate with replaceable insert and a highly robust lock. The height of the letter slot and a narrowing in the chute help protect your post against unauthorised removal.

Door communication and equipment

BASIC plastic nameplate, type 2: nameplate made from crystal-clear polycarbonate. The insert can be replaced from the front.

Universal adapter for all standard built-in intercom speakers: speaker perforations with an enclosed self-adhesive adapter plate for bonding in place. Any built-in intercom speaker can be secured to the adapter plate using a cable tie. No built-in intercom speaker is included!

BASIC stainless steel bell push button + BASIC plastic nameplate, type 2: brushed stainless steel collar and button with a transparent polycarbonate nameplate. The nameplate insert can be replaced from the front. The bell push button is vandal-resistant thanks to a mechanism that limits the force applied.

Features of this letterbox system

- Product range: BASIC Horizontal
- Installation: freestanding
- Finish: choice of RAL colour
- Overall dimensions: W 859 × H 1520 × D 430 mm
- 4 letterboxes, 1 function box, 4 accessory boxes
- Box finish: choice of RAL colour
- Attachment finish: choice of RAL colour
- Fixing method: screw fixing
- 4 bell push buttons with integrated call buttons
- Base material: V2A 1.4301 stainless steel. Finish: powder coating or brushed stainless steel

Important information:

Water protection: a sheltered location, preferably beneath a canopy, helps protect your post. Mail should be fully inserted and the letter flap closed.

Installation: the selected system requires a suitable load-bearing mounting surface. Please follow the installation instructions and take account of the configured fixing method.

Product properties

Series	BASIC
Number of bell push buttons	4 buttons
Functions	Parcel compartment
Number of boxes	with 4 parcel boxes, with 4 letterboxes
Name labelling	Nameplate
Mounting type	Free-standing
Material	Stainless steel V2A 1.4301
Removal of mail	On the front
Surface/colour	RAL of your choice (according to colour table)

Briefkasten Manufaktur Lippe GmbH
Werler Straße 60
32105 Bad Salzuflen

www.briefkasten-manufaktur.de
info@briefkasten-manufaktur.de
Tel.: +49 5222 807110

Geschäftsführer Oliver Woineck
Ust.ID.Nr. DE303690847
Handelsregister Amtsgericht Lemgo, HRB 8618

Dimensions

Height of single box in mm	110
Width of single box in mm	370
Overall height in mm	1520
Total width in mm	859
Depth in mm	430

Dimension drawing

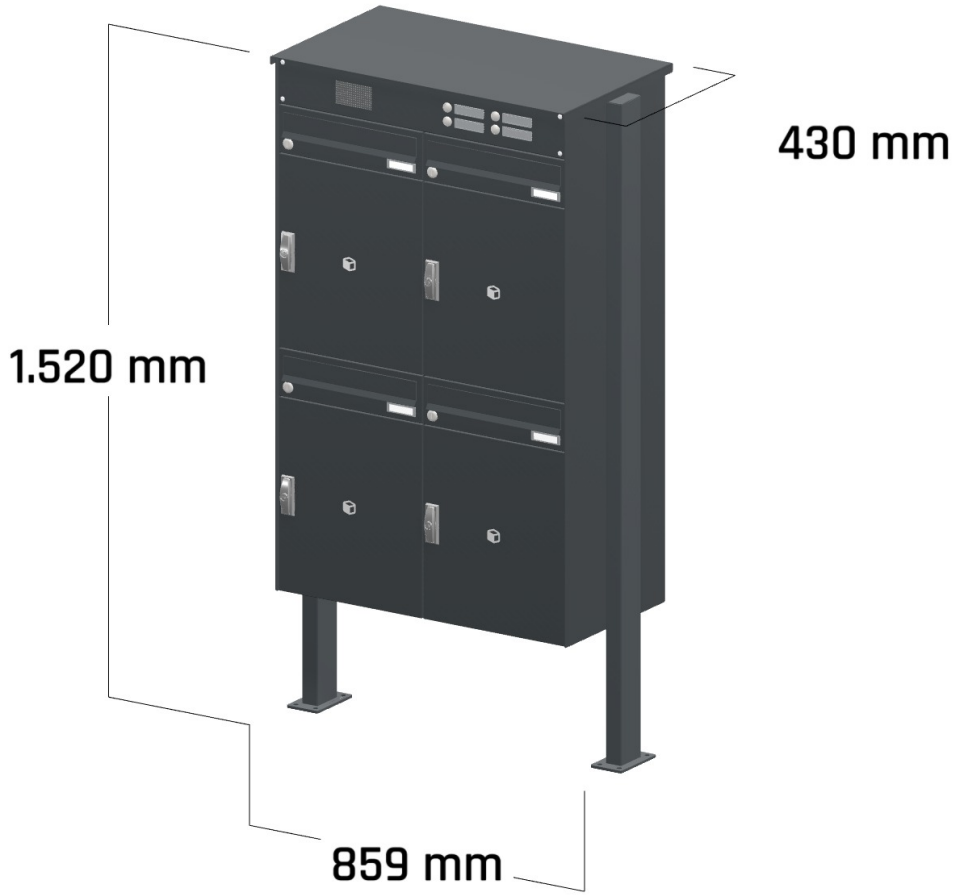

Briefkasten Manufaktur Lippe GmbH
Werler Straße 60
32105 Bad Salzuflen

www.briefkasten-manufaktur.de
info@briefkasten-manufaktur.de
Tel.: +49 5222 807110

Geschäftsführer Oliver Woineck
Ust.ID.Nr. DE303690847
Handelsregister Amtsgericht Lemgo, HRB 8618

More images

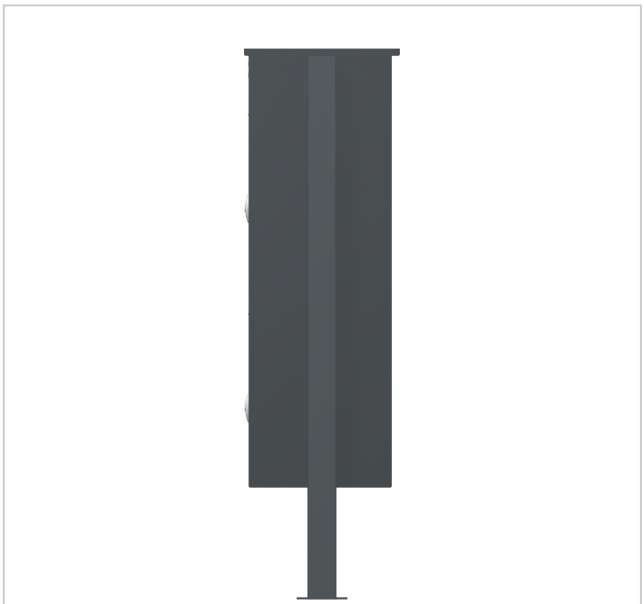





Briefkasten Manufaktur Lippe GmbH
Werler Straße 60
32105 Bad Salzuflen

www.briefkasten-manufaktur.de
info@briefkasten-manufaktur.de
Tel.: +49 5222 807110

Geschäftsführer Oliver Woineck
Ust.ID.Nr. DE303690847
Handelsregister Amtsgericht Lemgo, HRB 8618