6-unit freestanding letterbox Design BASIC 385-VA ST-R with doorbell box - Stainless steel V2A, brushed | Left | with 6 letterboxes | Stainless steel, brushed



Product number 385-VA-6W-SP-L

Product description

Freestanding 6-unit mailbox system BASIC 385 for 6 households – wide, multi-column configuration with bell/intercom module – bell panel left – brushed stainless steel V2A

With 6 individually usable mail compartments, the freestanding BASIC 385 provides a clear mail solution for apartment buildings, smaller residential complexes as well as office and medical practice premises. The free-standing mounting allows flexible positioning where the unit is easily accessible to residents and delivery personnel.

The W version distributes the mail compartments in a wider, multi-column layout and creates a clear façade for multiple users.

The mailboxes are made of weather-resistant stainless steel V2A 1.4301 and are finely brushed. A close-fitting side cladding with rain hood unites the individual mailboxes into a single enclosed unit.

Each compartment features an aperture of 35 × 265 mm suitable for DIN C4 items in portrait orientation. A noise-damping rubber lip reduces impact noise, while the front retrieval doors open from left to right. Each mailbox is supplied with two keys with key number and a replaceable nameplate below the aperture flap.

The integrated bell/intercom module on the left combines the doorbell function and provision for an intercom directly within the mailbox system.

The advantages of the BASIC 385 at a glance

Solid stainless steel support posts

Round-tube support posts of approx. 60 mm diameter in brushed stainless steel V2A 1.4301 form a stable base for the freestanding mailbox system. The robust construction is designed for permanent use at the property entrance.

Briefkasten Manufaktur Lippe GmbH
Werler Straße 60
32105 Bad Salzuflen

www.briefkasten-manufaktur.de
info@briefkasten-manufaktur.de
Tel.: +49 5222 807110

Geschäftsführer Oliver Woineck
Ust.ID.Nr. DE303690847
Handelsregister Amtsgericht Lemgo, HRB 8618

Large aperture according to DIN EN 13724

The slot measuring 35 × 265 mm is designed for DIN C4 items in portrait orientation. Larger envelopes can also be deposited without bending.

Quiet deposit and comfortable retrieval

A noise-damping rubber lip reduces the impact of the aperture flaps. Mail is retrieved from the front via doors that open from left to right.

Completely in brushed stainless steel

The stainless steel design combines mailboxes, cladding and support posts into a high-quality, low-maintenance overall unit.

Bell/intercom module integrated directly

The bell/intercom panel on the left is integrated directly into the mailbox system.

Equipment of the BASIC 385 mailbox system

Mailbox system

Configuration Wide, multi-column configuration
Number of mailboxes 6 individually usable mail compartments
Mailbox material Stainless steel V2A 1.4301
Finish Stainless steel V2A 1.4301, brushed
Rain hood / side cladding Stainless steel V2A 1.4301, brushed
Manufacture Made in Germany by Briefkasten Manufaktur Lippe

Mail handling and operation

Aperture 35 × 265 mm, suitable for DIN C4 portrait
Aperture flaps With noise-damping rubber lip
Mail retrieval From the front
Door opening Opens from left to right
Keys 2 keys with key number per mailbox
Nameplate Replaceable nameplate below the aperture flap
Standard Mailboxes conforming to DIN EN 13724

Support posts and fittings

Support posts Round tube approx. 60 mm in stainless steel V2A 1.4301, brushed
Installation methods Available either for screw mounting or for embedding in concrete
Fixings Anchor bolts for screw mounting are not included; select appropriate fixings for the foundation separately
Bell/intercom module Integrated functional panel, position: left
Intercom provision Speech aperture with universal adapter for common built-in loudspeakers
Doorbell pushbuttons Round stainless steel doorbell pushbuttons matching the product finish

Mailbox size and volume

The BASIC 385 is available with different mailbox sizes depending on the product configuration. The standard version 300 × 110 × 385 mm provides approx. 12 litres of volume; depending on the variant, 300 × 220 × 385 mm with approx. 25 litres of volume is also available.

Installation by embedding in concrete

For the freestanding unit we recommend a suitably dimensioned concrete foundation. When embedding, the stainless steel support posts must be set plumb and permanently anchored in the foundation. Foundation size and embedment depth must be adjusted to ground conditions, the weight of the unit and local circumstances.

Screw mounting on a foundation

A flat, load-bearing concrete foundation is required for screw mounting. Suitable anchor bolts or fixings must be chosen to suit the substrate and the load. For BASIC-385-ST-R versions, anchor bolts are not included in the standard scope of delivery.

Note on weather protection

Mail items are best protected against moisture and dirt only when fully inserted and the aperture flap is closed. Protruding items can prevent the flap from closing completely. Under extreme weather conditions, moisture may enter the mailbox despite compliant construction.

Note regarding bell and intercom technology

The bell/intercom module is prepared with a speech aperture and universal adapter for common built-in loudspeakers. Intercom systems and built-in loudspeakers are not included in the standard equipment. Planning, connection and commissioning of electrical components should be carried out by a qualified electrician.

Product properties

Series	BASIC
Number of bell push buttons	6 buttons
Functions	Light button, Intercom
Functional box prepared for manufacturer	GIRA, Busch Jaeger, Siedle, STR Elektronik, ELCOM, TCS, Ritto, ALGO, Telegärtner, Auerswald, Legrand Bticino, Comelit
Number of boxes	with 6 letterboxes
Boxes by volume	Normal > 10 litres
Name labelling	Nameplate
Mounting type	Free-standing
Material	Stainless steel V2A 1.4301
Removal of mail	On the front
Surface/colour	Brushed

Briefkasten Manufaktur Lippe GmbH
Werler Straße 60
32105 Bad Salzuflen

www.briefkasten-manufaktur.de
info@briefkasten-manufaktur.de
Tel.: +49 5222 807110

Geschäftsführer Oliver Woineck
Ust.ID.Nr. DE303690847
Handelsregister Amtsgericht Lemgo, HRB 8618

Dimensions

Height of single box in mm	110.0
Width of single box in mm	300.0
Capacity in litres	12
Height of letterbox slot in mm	35.0
Width of letter slot in mm	265.0
Height of letterbox in mm	440.0
Width of letterbox system in mm	600.0
Overall height in mm	1200.0 | 1500.0 | 1700.0
Total width in mm	765.0
Depth in mm	435.0
Weight in kg	38
Delivery condition	Delivery is made in blocks; freestanding elements / mailbox are delivered in separate sections.

Dimension drawing

Briefkasten Manufaktur Lippe GmbH
Werler Straße 60
32105 Bad Salzuflen

www.briefkasten-manufaktur.de
info@briefkasten-manufaktur.de
Tel.: +49 5222 807110

Geschäftsführer Oliver Woineck
Ust.ID.Nr. DE303690847
Handelsregister Amtsgericht Lemgo, HRB 8618

Montagebohrungen

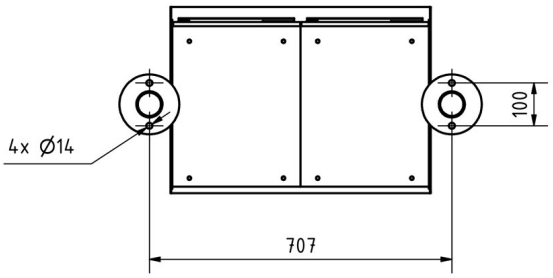

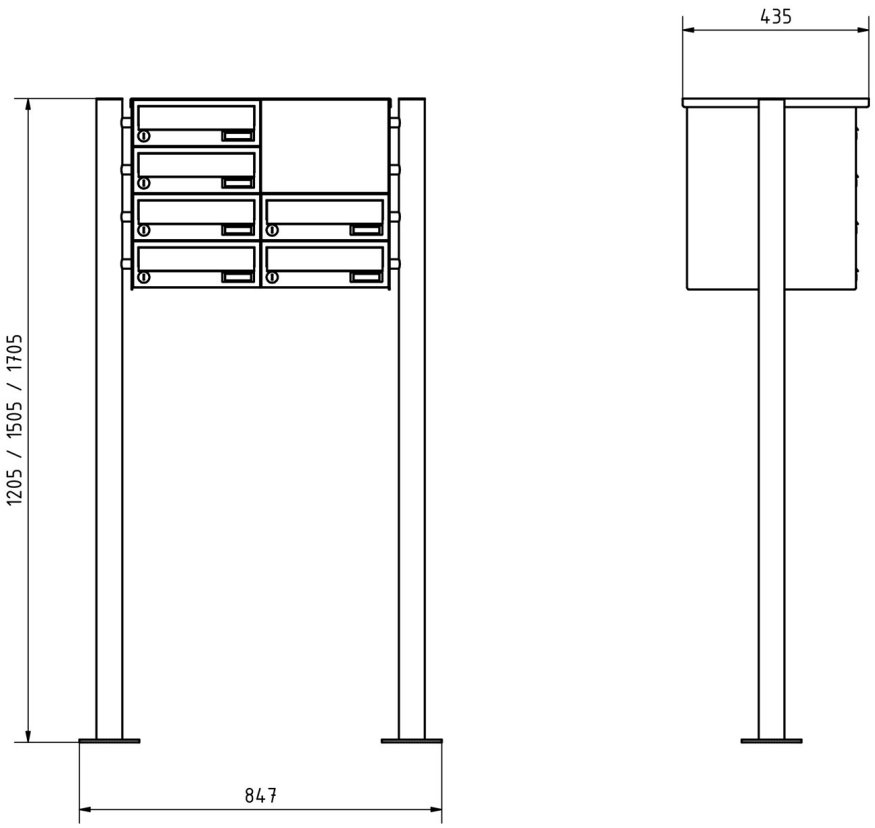

Briefkasten Manufaktur Lippe GmbH
Werler Straße 60
32105 Bad Salzuflen

www.briefkasten-manufaktur.de
info@briefkasten-manufaktur.de
Tel.: +49 5222 807110

Geschäftsführer Oliver Woineck
Ust.ID.Nr. DE303690847
Handelsregister Amtsgericht Lemgo, HRB 8618

More images







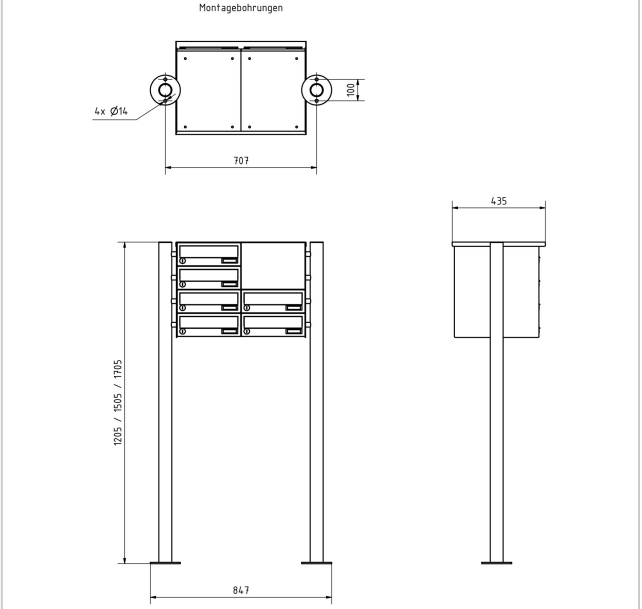

Briefkasten Manufaktur Lippe GmbH
Werler Straße 60
32105 Bad Salzuflen

www.briefkasten-manufaktur.de
info@briefkasten-manufaktur.de
Tel.: +49 5222 807110

Geschäftsführer Oliver Woineck
Ust.ID.Nr. DE303690847
Handelsregister Amtsgericht Lemgo, HRB 8618





Briefkasten Manufaktur Lippe GmbH
Werler Straße 60
32105 Bad Salzuflen

www.briefkasten-manufaktur.de
info@briefkasten-manufaktur.de
Tel.: +49 5222 807110

Geschäftsführer Oliver Woineck
Ust.ID.Nr. DE303690847
Handelsregister Amtsgericht Lemgo, HRB 8618