6-compartment stainless steel surface-mounted mailbox Design BASIC Plus 382XA AP with doorbell box - stainless steel V2A | 150mm depth | with 6 letterboxes (2x3) | Top | Stainless steel, brushed

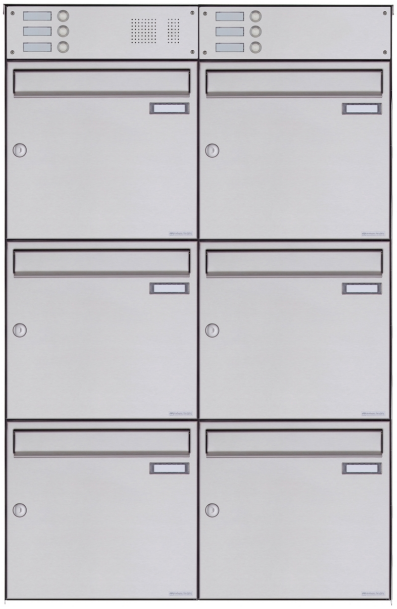

Product number 382XA-VA-6-SP-150-O

Product description

6-unit stainless-steel surface-mounted mailbox Design BASIC Plus 382XA AP with bell box - stainless steel V2A

High-quality surface-mounted mailbox for 6 households made in Germany by Briefkasten Manufaktur. The mailbox is made entirely of stainless steel V2A, brushed. The very high-quality workmanship and the well thought-out concept make this mailbox one of our top sellers. A drip edge for optimal protection against water, a continuous rubber lip for quiet insertion, the solid replaceable nameplate, a practical mail retention bar and the very robust lock characterise this surface-mounted mailbox.

The mailbox systems of the BASIC Plus collection are characterised by the consistent use of stainless steel V2A. The result is very high durability and sustainability. The construction has been developed by our own engineers with a view to high flexibility and modularity, easy spare-part replacement and straightforward self-installation. Spare parts are directly available for all BASIC Plus systems.

Thanks to the design, self-installation is uncomplicated. The mailbox system is prepared for straightforward complete mounting; there is no need for time-consuming wall mounting of individual boxes. 6-unit surface-mounted mailbox made of weather-resistant stainless steel V2A 1.4301, 240-grit brushed.

The benefits at a glance

Stainless-steel side panel with rain hood

Side panel and rain hood are made of stainless steel V2A 1.4301, 240-grit brushed, and complement the system as a structurally matched weather protection.

Generous letter slot

Briefkasten Manufaktur Lippe GmbH
Werler Straße 60
32105 Bad Salzuflen

www.briefkasten-manufaktur.de
info@briefkasten-manufaktur.de
Tel.: +49 5222 807110

Geschäftsführer Oliver Woineck
Ust.ID.Nr. DE303690847
Handelsregister Amtsgericht Lemgo, HRB 8618

The letter slot measures 35 × 325 mm and is designed for landscape DIN C4. The mailbox conforms to DIN EN 13724.

Quiet insertion and comfortable removal

The integrated flap damping with rubber seal reduces impact noise during insertion. The mail retention bar holds items back during removal.

Integrated bell and intercom area

Bell box made of stainless steel V2A 1.4301, 240-grit brushed. The stainless-steel doorbell pushbutton Type 4 is used. Optionally prepared with a speech grille for the installation of standard audio intercom systems or flush-fit speakers. (Audio intercom/flush-fit speakers not included). An optional version with Comelit Ultra video complete set is also available.

Quality manufacture and well thought-out construction

The system is manufactured at Briefkasten Manufaktur in Germany. The construction is designed for straightforward self-installation.

Equipment and product details

Mailbox system

Number of mailboxes 6 individually usable mail compartments
Arrangement 2 × 3
Depth 150 mm
Mailbox material Stainless steel V2A 1.4301
Mailbox surface 240-grit brushed
Bell/intercom section Bell box made of stainless steel V2A 1.4301, 240-grit brushed

Mail and operation

Letter slot 35 × 325 mm, suitable for landscape DIN C4
Standard DIN EN 13724
Insertion flap Sound-damped with rubber seal
Keys 2 keys with key number per mailbox
Nameplate Interchangeable nameplate below the letter flap
Mail retention bar Integrated for each mailbox

Mounting and equipment

Installation type Surface-mounted
Drip edge Integrated into the construction
Rain hood Made of stainless steel V2A 1.4301, 240-grit brushed
Side panel Made of stainless steel V2A 1.4301, 240-grit brushed
Mounting materials For wall mounting, including mounting rail and fixings (screws + wall plugs)
Manufacture Made in Germany by Briefkasten Manufaktur Lippe

Note on weather protection

Briefkasten Manufaktur Lippe GmbH
Werler Straße 60
32105 Bad Salzuflen

www.briefkasten-manufaktur.de
info@briefkasten-manufaktur.de
Tel.: +49 5222 807110

Geschäftsführer Oliver Woineck
Ust.ID.Nr. DE303690847
Handelsregister Amtsgericht Lemgo, HRB 8618

Mail items are best protected from moisture and dirt when fully inserted and the letter flap is closed. Protruding items may prevent the flap from closing completely.

Note on wall mounting

Before installation, the load-bearing capacity and condition of the wall must be checked. The fixings must be matched to the system weight and the existing wall construction.

Product properties

Series	BASIC
Number of bell push buttons	6 buttons
Functions	Light button, Intercom
Functional box prepared for manufacturer	GIRA, Busch Jaeger, Siedle, STR Elektronik, ELCOM, TCS, Ritto, ALGO, Telegärtner, Auerswald, Legrand Bticino, Comelit
Number of boxes	with 6 letterboxes
Name labelling	Nameplate
Material	Stainless steel V2A 1.4301
Removal of mail	On the front
Surface/colour	Brushed
Boxes by volume	Large > 16 litres
Mounting type	Surface-mounted

Dimensions

Height of single box in mm	330.0
Width of single box in mm	355.0
Capacity in litres	12.0 | 17.0
Height of letterbox slot in mm	35.0
Width of letter slot in mm	325.0
Height of letterbox in mm	760.0
Width of letterbox system in mm	1090.0
Total width in mm	1090.0
Depth in mm	100.0 | 150.0
Weight in kg	32

Briefkasten Manufaktur Lippe GmbH
Werler Straße 60
32105 Bad Salzuflen

www.briefkasten-manufaktur.de
info@briefkasten-manufaktur.de
Tel.: +49 5222 807110

Geschäftsführer Oliver Woineck
Ust.ID.Nr. DE303690847
Handelsregister Amtsgericht Lemgo, HRB 8618

More images

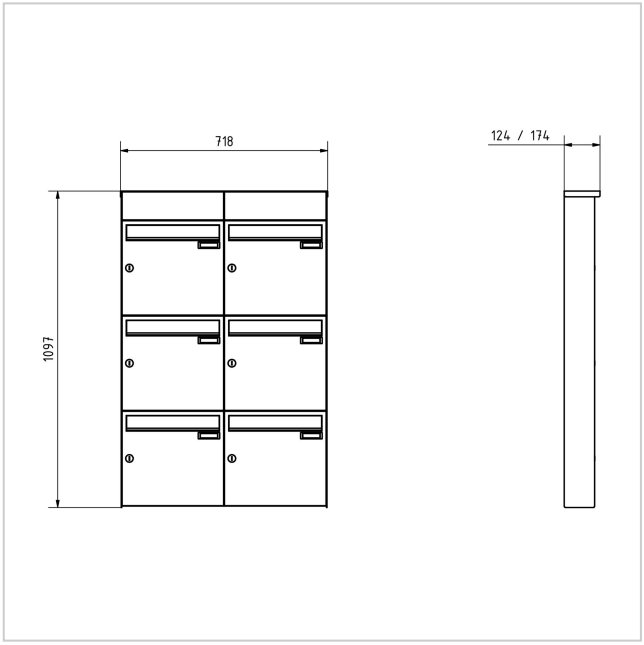







Briefkasten Manufaktur Lippe GmbH
Werler Straße 60
32105 Bad Salzuflen

www.briefkasten-manufaktur.de
info@briefkasten-manufaktur.de
Tel.: +49 5222 807110

Geschäftsführer Oliver Woineck
Ust.ID.Nr. DE303690847
Handelsregister Amtsgericht Lemgo, HRB 8618









Briefkasten Manufaktur Lippe GmbH
Werler Straße 60
32105 Bad Salzuflen

www.briefkasten-manufaktur.de
info@briefkasten-manufaktur.de
Tel.: +49 5222 807110

Geschäftsführer Oliver Woineck
Ust.ID.Nr. DE303690847
Handelsregister Amtsgericht Lemgo, HRB 8618



Briefkasten Manufaktur Lippe GmbH
Werler Straße 60
32105 Bad Salzuflen

www.briefkasten-manufaktur.de
info@briefkasten-manufaktur.de
Tel.: +49 5222 807110

Geschäftsführer Oliver Woineck
Ust.ID.Nr. DE303690847
Handelsregister Amtsgericht Lemgo, HRB 8618