GOETHE 4-unit through-wall letterbox bank with 4 newspaper compartments – RAL colour of your choice | 300-390mm depth | with 4 mailboxes (2x2)



Product number BML3D-KPFYWEDG1V

Product description

Four individual letterboxes and separate newspaper compartments with collection from behind the wall

The GOETHE through-wall letterbox bank from Briefkasten Manufaktur combines four letterboxes with four separate newspaper compartments. Letters and newspapers are collected from the rear of the wall.

The boxes are powder-coated in your chosen RAL colour. The installation depth is adjustable from 300 to 390 mm.

Letterbox bank specifications

- Mounting type: through-wall
- Overall external dimensions (W × H × D): 854 × 854 × 409 mm
- Adjustable installation depth: 300–390 mm
- Layout: 4 letterboxes and 4 newspaper compartments
- Materials: grade 1.4016 stainless steel housings and V2A grade 1.4301 stainless steel faceplates
- Box finish: powder-coated in your choice of RAL colour

Key features of this letterbox bank

Damped letter flaps and rear access

The damped flaps keep noise to a minimum when letters are posted. The letterboxes also accept DIN-C4 envelopes. A rainwater run-off edge and a continuous rubber lip help prevent water from getting in.

The rear collection doors are fitted with cam locks. The doors are positioned to keep post from falling out when opened.

Separate compartments for newspapers and magazines

Briefkasten Manufaktur Lippe GmbH
Werler Straße 60
32105 Bad Salzuflen

www.briefkasten-manufaktur.de
info@briefkasten-manufaktur.de
Tel.: +49 5222 807110

Geschäftsführer Oliver Woineck
Ust.ID.Nr. DE303690847
Handelsregister Amtsgericht Lemgo, HRB 8618

The four newspaper compartments keep newspapers and magazines separate from letters. To collect them, open the rear doors by pulling them down from the top. These doors are fitted with turn-knob locks.

Nameplates with inserts that can be changed from the front

Each letterbox has two clear polycarbonate nameplates on the front. The inserts can be changed from the front. A ‘No junk mail, please’ insert is included.

Requirements for through-wall installation

Allow enough space for installation and ensure that the structural integrity of the wall is not compromised. The letterbox bank is uninsulated and should not be installed in heated buildings.

Customise your letterbox bank

Select ‘Configure now’ to adapt the configuration shown to suit your home and preferences.

- Box finish: use the 3D configurator to choose from the colours available for this version.
- Personalised lettering: add your own names, house numbers or text in the designated areas. The lettering shown is for illustration and can be changed.
- Lettering style: choose from the available fonts and adjust the appearance in the configurator.
- Components: add or change compatible components from the available selection.

When you make changes, the 3D configurator recalculates the dimensions and price based on your selection.

Important information

Protection from rain: a sheltered location, ideally under a canopy, helps keep your post dry. Make sure items are pushed all the way in and the letter flap is closed.

Installation: check that the mounting surface and installation site are suitable, using the overall dimensions and installation instructions as a guide.

Product properties

Series	GOETHE
Number of boxes	with 4 letterboxes
Name labelling	Nameplate
Material	Stainless steel V2A 1.4301, Stainless steel 1.4016 (non-rusting magnetic stainless steel)
Surface/colour	RAL of your choice (according to colour table)
Boxes by volume	Jumbo > 30 litres
Mounting type	Wall throw-through
Removal of mail	On the back

Briefkasten Manufaktur Lippe GmbH
Werler Straße 60
32105 Bad Salzuflen

www.briefkasten-manufaktur.de
info@briefkasten-manufaktur.de
Tel.: +49 5222 807110

Geschäftsführer Oliver Woineck
Ust.ID.Nr. DE303690847
Handelsregister Amtsgericht Lemgo, HRB 8618

Dimensions

Height of single box in mm	200
Width of single box in mm	400
Capacity in litres	BK 24,0–31,2 | ZF 24,0–31,2
Overall height in mm	854
Total width in mm	854
Depth in mm	300–390

Dimension drawing

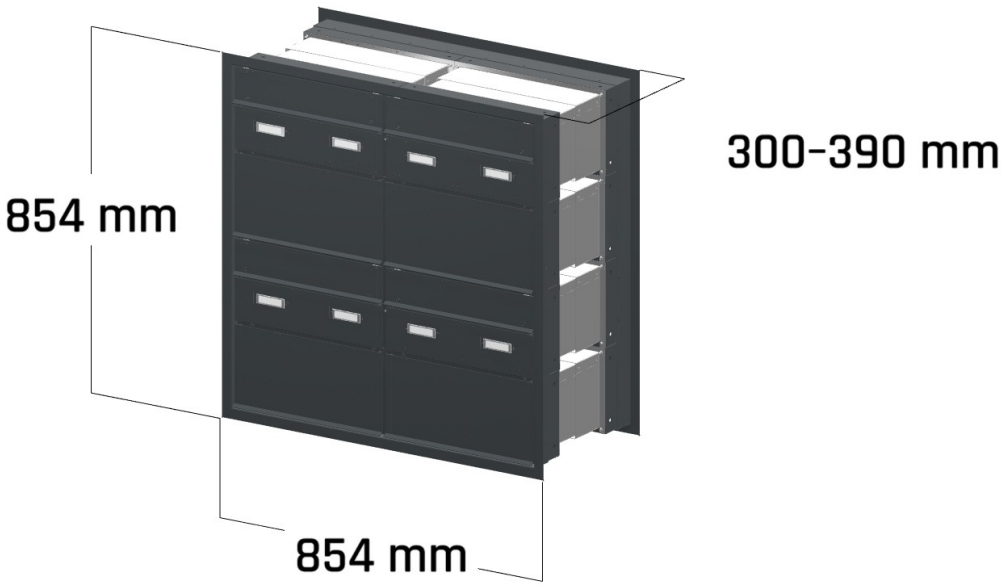

More images







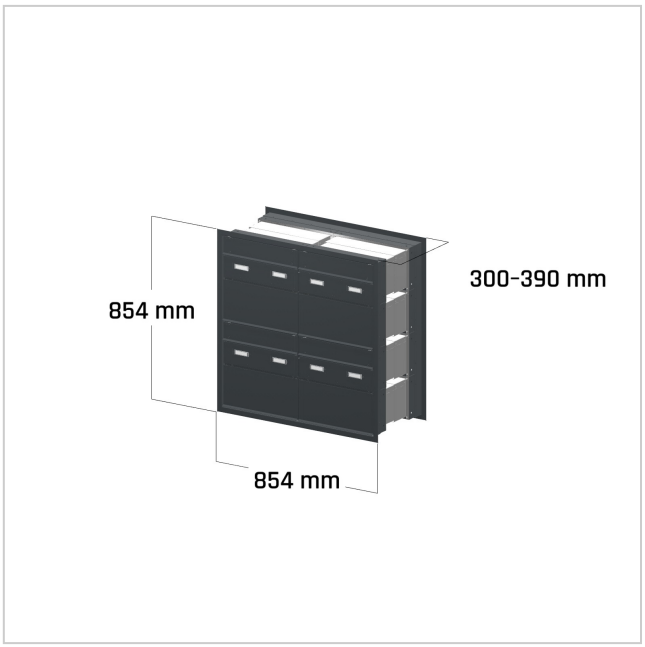

Briefkasten Manufaktur Lippe GmbH
Werler Straße 60
32105 Bad Salzuflen

www.briefkasten-manufaktur.de
info@briefkasten-manufaktur.de
Tel.: +49 5222 807110

Geschäftsführer Oliver Woineck
Ust.ID.Nr. DE303690847
Handelsregister Amtsgericht Lemgo, HRB 8618





Briefkasten Manufaktur Lippe GmbH
Werler Straße 60
32105 Bad Salzuflen

www.briefkasten-manufaktur.de
info@briefkasten-manufaktur.de
Tel.: +49 5222 807110

Geschäftsführer Oliver Woineck
Ust.ID.Nr. DE303690847
Handelsregister Amtsgericht Lemgo, HRB 8618