4-compartment freestanding mailbox Design BASIC 385P-9016 ST-T - RAL 9016 traffic white | RAL 9016 Traffic White, fine-textured matt | with 4 mailboxes (1x4) | 300x110x385 mm (WxHxD) - ?? Normal 12 litres



Product number 385P-9016-4S

Product description

Freestanding mailbox system BASIC 385P for 4 units – RAL 9016 Traffic White – narrow version

The freestanding BASIC 385P mailbox system for 4 units is designed for apartment buildings, smaller residential complexes and commercial properties. Four separately lockable mail compartments are arranged in a narrow configuration to form a stable, clearly organised overall unit. The free-standing installation allows a conveniently accessible position independent of the building façade.

The mailboxes are made of galvanised steel and are powder-coated in RAL 9016 Traffic White fine-textured matt. A close-fitting side panel with rain canopy and integrated rain drainage channels supports weather protection. The solidly manufactured uprights from anodised aluminium profile are also powder-coated in RAL 9016 Traffic White and provide an especially stable, long-lasting base for the freestanding unit.

Each of the 4 mail compartments has approx. 12 litres capacity. The 35 × 265 mm mail slot is designed for DIN C4 items in portrait orientation. A noise-damping rubber lip reduces the impact of the flap. Mail is collected from the front; the access doors open from left to right. Each mailbox is supplied with two numbered keys and an interchangeable name plate beneath the mail slot.

The advantages of the BASIC 385P mailbox system at a glance

Solid aluminium uprights

Solidly manufactured, anodised aluminium profiles form the stable base of the freestanding unit. The powder-coated construction combines high load capacity with a durable finish for outdoor use.

DIN C4 slot with 12-litre capacity

Briefkasten Manufaktur Lippe GmbH
Werler Straße 60
32105 Bad Salzuflen

www.briefkasten-manufaktur.de
info@briefkasten-manufaktur.de
Tel.: +49 5222 807110

Geschäftsführer Oliver Woineck
Ust.ID.Nr. DE303690847
Handelsregister Amtsgericht Lemgo, HRB 8618

The mailboxes each offer approx. 12 litres of mail capacity. The 35 × 265 mm slot accepts DIN C4 items in portrait orientation without larger envelopes having to be unnecessarily folded.

Quiet drop and reliable operation

Rubber lips dampen the flap impacts. Robust locks, two keys per compartment and protected interchangeable name plates are designed for daily use in multi-unit properties.

Screw mounting or concrete embedding

Depending on the selected version, the aluminium uprights are either bolted to a load-bearing foundation or permanently embedded in concrete. This allows the unit to be installed to suit the site conditions.

Robust BASIC quality in RAL 9016 Traffic White

Galvanised steel, stainless steel components, solid aluminium uprights and German manufacturing result in a resilient mailbox system for long-term use at the property entrance.

Specification of the BASIC 385P mailbox system

Mailbox system

Number of mailboxes 4 separately usable mail compartments
Mailbox dimensions 300 × 110 × 385 mm (W × H × D) per compartment
Mail volume Approx. 12 litres per mailbox
Material Galvanised steel; side panels and rain canopy in stainless steel V2A
Finish RAL 9016 Traffic White fine-textured matt
Mail slot 35 × 265 mm, suitable for DIN C4 portrait
Standard Mailboxes conforming to DIN EN 13724

Mail and operation

Flaps With noise-damping rubber lip
Mail retrieval From the front
Door opening Opens from left to right
Keys 8 keys in total, 2 per mailbox
Name plates 4 interchangeable name plates beneath the mail slots
Rain drainage Integrated rain drainage channels

Solid aluminium uprights

Uprights Solidly manufactured, anodised aluminium profile
Coating Powder-coated in RAL 9016 Traffic White
Mounting options Choice of screw mounting or concrete embedding
Screw mounting Uprights selectable in 1200 or 1600 mm
Concrete embedding Uprights selectable in 1600 or 2000 mm
Delivery condition Uprights and mailbox unit supplied pre-separated for assembly
Manufacture Made in Germany by Briefkasten Manufaktur Lippe

Mounting on a foundation

Briefkasten Manufaktur Lippe GmbH
Werler Straße 60
32105 Bad Salzuflen

www.briefkasten-manufaktur.de
info@briefkasten-manufaktur.de
Tel.: +49 5222 807110

Geschäftsführer Oliver Woineck
Ust.ID.Nr. DE303690847
Handelsregister Amtsgericht Lemgo, HRB 8618

For screw mounting, a level and sufficiently load-bearing foundation is required. Fasteners must be selected to suit the foundation, unit weight and local installation conditions.

Mounting by concrete embedding

For the concrete embedding version, the extended aluminium uprights are set vertically and anchored in a suitably dimensioned concrete foundation. Foundation size and embedment depth must be matched to ground conditions, unit dimensions and local loads.

Note on weather protection

The rain canopy, close-fitting side panels and rain drainage channels support weather protection. Mail items must be fully inserted so the flap can close completely. Under extreme weather conditions, small amounts of moisture may penetrate despite conformity with the standard.

Product properties

Material	Steel, galvanised, Aluminium AlMg3 W19, Stainless steel V2A 1.4301
Series	BASIC
Boxes by volume	Normal > 10 litres
Number of boxes	with 4 letterboxes
Name labelling	Nameplate
Mounting type	Free-standing
Removal of mail	On the front
Surface/colour	RAL 9016 traffic white

Dimensions

Height in mm	1
Height of single box in mm	110.0
Width of single box in mm	300.0
Capacity in litres	12
Height of letterbox slot in mm	35.0
Width of letter slot in mm	265.0
Height of letterbox in mm	440.0
Width of letterbox system in mm	300.0
Overall height in mm	1200.0 | 1600.0
Total width in mm	400.0
Depth in mm	435.0
Weight in kg	38
Delivery condition	Delivery is made in blocks; freestanding elements / mailbox supplied separately.

Briefkasten Manufaktur Lippe GmbH
Werler Straße 60
32105 Bad Salzuflen

www.briefkasten-manufaktur.de
info@briefkasten-manufaktur.de
Tel.: +49 5222 807110

Geschäftsführer Oliver Woineck
Ust.ID.Nr. DE303690847
Handelsregister Amtsgericht Lemgo, HRB 8618

More images

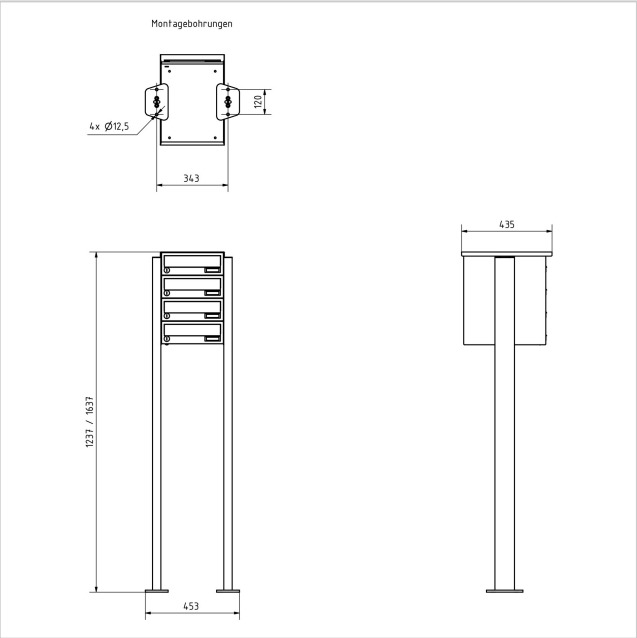







Briefkasten Manufaktur Lippe GmbH
Werler Straße 60
32105 Bad Salzuflen

www.briefkasten-manufaktur.de
info@briefkasten-manufaktur.de
Tel.: +49 5222 807110

Geschäftsführer Oliver Woineck
Ust.ID.Nr. DE303690847
Handelsregister Amtsgericht Lemgo, HRB 8618





Briefkasten Manufaktur Lippe GmbH
Werler Straße 60
32105 Bad Salzuflen

www.briefkasten-manufaktur.de
info@briefkasten-manufaktur.de
Tel.: +49 5222 807110

Geschäftsführer Oliver Woineck
Ust.ID.Nr. DE303690847
Handelsregister Amtsgericht Lemgo, HRB 8618