6er 3x2 stainless steel flush-mounted letterbox system BASIC Plus 382XU UP - polished stainless steel - 6 parties | 100mm depth | with 6 mailboxes (3x2) | Stainless steel, brushed



Product number 382XU-VA-6W-100

Product description

6-unit 3x2 stainless steel flush-mounted mailbox system BASIC Plus 382XU UP - brushed stainless steel - 6 tenants

Modern flush-mounted mailbox for 6 tenants - made in Germany by Briefkasten Manufaktur.

The mailbox is made entirely from stainless steel V2A, brushed. The very high-quality workmanship and the well thought-out concept make this flush-mounted mailbox one of our top sellers. A rain drip edge for optimal water protection, a continuous rubber lip for quiet mail insertion, the solid interchangeable nameplate, a practical mail-retaining bar and the very robust lock characterise this flush-mounted mailbox. The flush-mounted frame made from stainless steel V2A is fitted with a foam-rubber seal and guarantees very high durability.

The mailbox systems of the BASIC Plus collection are characterised by the consistent use of stainless steel V2A. The result is very high durability and sustainability. The design has been developed by our own engineers with a view to high flexibility and modularity, easy spare-part installation and straightforward self-installation. Spare parts are directly available for all BASIC Plus systems.

Briefkasten Manufaktur Lippe GmbH
Werler Straße 60
32105 Bad Salzuflen

www.briefkasten-manufaktur.de
info@briefkasten-manufaktur.de
Tel.: +49 5222 807110

Geschäftsführer Oliver Woineck
Ust.ID.Nr. DE303690847
Handelsregister Amtsgericht Lemgo, HRB 8618

- 6-unit flush-mounted mailbox system completely made from stainless steel V2A 1.4301, 240-grit brushed.
- The system is manufactured at Briefkasten Manufaktur. German quality production "Made in Germany".
- The mailboxes comply with DIN/EN 13724. Inlet size (3.5 cm x 32.5 cm) for C4 landscape; large envelopes fit without bending.
- Deposit flap with noise-dampening rubber seal for very quiet mail insertion.
- The door opens from left to right.
- Incl. 2 keys with key number, interchangeable nameplate (Type 2) under the deposit flap and mail-retaining bar.
- Large capacity thanks to optional mailbox depth +50 mm = approx. 17 l. Suitable for businesses and households with very high mail volumes.
- Plaster cover frame made from stainless steel angle profile 25 x 58 mm, 240-grit brushed.

Important information:

Mail is only protected from moisture and dirt when fully inserted and the flap is closed. Under certain extreme weather conditions, water may still enter (according to DIN EN 13724 up to 1 cm^3). This is not grounds for a complaint.

Product properties

Series	BASIC
Number of boxes	with 6 letterboxes
Boxes by volume	Normal > 10 litres
Name labelling	Nameplate
Material	Stainless steel V2A 1.4301
Removal of mail	On the front
Surface/colour	Brushed
Mounting type	Flush-mounted

Dimensions

Height of single box in mm	330.0
Width of single box in mm	355.0
Capacity in litres	12.0 | 17.0
Height of letterbox slot in mm	35.0
Width of letter slot in mm	325.0
Height of letterbox in mm	710.0
Width of letterbox system in mm	1115,0
Depth in mm	100.0 | 150.0
Weight in kg	32
Delivery condition	Delivered fully assembled.

Briefkasten Manufaktur Lippe GmbH
Werler Straße 60
32105 Bad Salzuflen

www.briefkasten-manufaktur.de
info@briefkasten-manufaktur.de
Tel.: +49 5222 807110

Geschäftsführer Oliver Woineck
Ust.ID.Nr. DE303690847
Handelsregister Amtsgericht Lemgo, HRB 8618

More images









Briefkasten Manufaktur Lippe GmbH
Werler Straße 60
32105 Bad Salzuflen

www.briefkasten-manufaktur.de
info@briefkasten-manufaktur.de
Tel.: +49 5222 807110

Geschäftsführer Oliver Woineck
Ust.ID.Nr. DE303690847
Handelsregister Amtsgericht Lemgo, HRB 8618



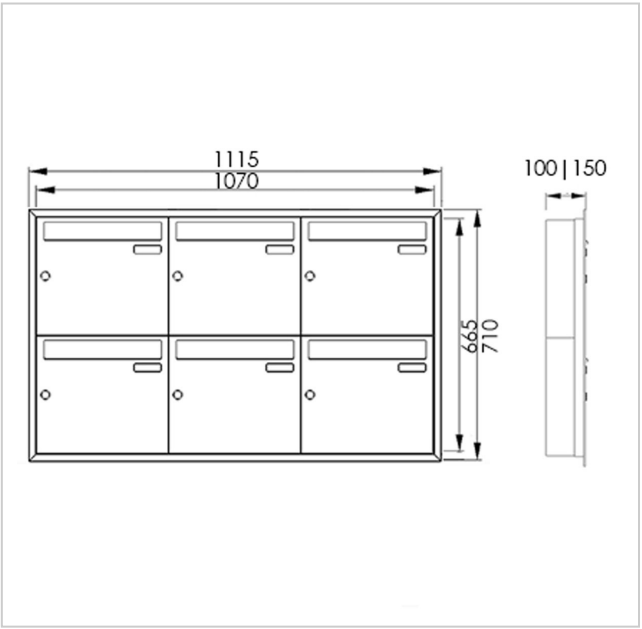

Briefkasten Manufaktur Lippe GmbH
Werler Straße 60
32105 Bad Salzuflen

www.briefkasten-manufaktur.de
info@briefkasten-manufaktur.de
Tel.: +49 5222 807110

Geschäftsführer Oliver Woineck
Ust.ID.Nr. DE303690847
Handelsregister Amtsgericht Lemgo, HRB 8618