3-unit stainless steel mailbox system Design BASIC Plus 385XW for side wall mounting - RAL colour of your choice | Right | with 3 mailboxes (1x3)



Product number 385XW-3S-R

Product description

Side-mounted BASIC Plus 385XW mailbox system for 3 households – box position right

The BASIC Plus 385XW is a high-quality stainless steel mailbox system for side wall mounting, designed for 3 households. It was developed for small multi-family houses, medical practices and buildings with three usage units and enables space-saving installation beside the front door or on a suitable wall surface.

Three vertically aligned mailboxes make efficient use of the side wall area and provide a clear allocation for each user.

The mailboxes are made of stainless steel V2A 1.4301 and are powder-coated in a RAL or DB colour of your choice. The rain hood and side cladding are also made of stainless steel. Side mounting is via Ø 60.3 mm stainless steel posts with a 240-grit finish.

In this product variant the box position is on the right. The side arrangement creates a clear mounting edge and allows the mailbox system to be aligned to the entrance situation.

The advantages of the BASIC Plus 385XW at a glance

Solid stainless steel mounting posts

Side wall fastening is by Ø 60.3 mm posts made of stainless steel V2A 1.4301 with a 240-grit finish. They provide a stable and durable connection between the mailbox system and the building wall.

Side wall mounting

The 385XW is mounted to a suitable house wall on the side. The box position for this variant is right; this allows the system to be tailored to the existing entrance situation.

Briefkasten Manufaktur Lippe GmbH
Werler Straße 60
32105 Bad Salzuflen

www.briefkasten-manufaktur.de
info@briefkasten-manufaktur.de
Tel.: +49 5222 807110

Geschäftsführer Oliver Woineck
Ust.ID.Nr. DE303690847
Handelsregister Amtsgericht Lemgo, HRB 8618

BASIC Plus in stainless steel V2A

Mailboxes, cladding and fastening elements consistently use stainless steel V2A 1.4301. The powder-coated mailboxes combine a high-quality surface with a durable construction.

DIN C4 slot with rubber lip

Each compartment has an insertion aperture of 35 × 265 mm for DIN C4 portrait. A noise-dampening rubber lip reduces the impact noise of the flap.

Robust solution for 3 households

Three households receive a clear and space-saving mailbox solution with a robust stainless steel substructure. The modular BASIC-Plus construction also simplifies maintenance and spare parts installation.

Equipment of the BASIC Plus 385XW for 3 households

Mailbox system

Number of compartments 3 mailboxes
Arrangement 1 column × 3 rows
Material Stainless steel V2A 1.4301
Surface Powder-coated in RAL/DB colour of choice
Rain hood / side cladding Stainless steel V2A 1.4301, powder-coated to match
Manufacture Made in Germany by Briefkasten Manufaktur Lippe

Mail and operation

Insertion aperture 35 × 265 mm per mailbox, suitable for DIN C4 portrait
Mail volume Approx. 12 litres per mailbox
Drop flaps With noise-dampening rubber lip
Mail retrieval Front access
Door opening Opens from left to right
Keys 6 keys in total, 2 per mailbox
Nameplates 3 interchangeable nameplates under the insertion flaps

Side mounting

Box position Right
Mounting posts Ø 60.3 mm stainless steel V2A 1.4301
Post surface 240-grit brushed finish
Installation type Screw-mounted to a suitable house wall
Fixings Select anchor bolts or coach screws on site to suit the wall construction
Standard Mailboxes in accordance with DIN EN 13724

Note on side wall mounting

The wall must be clean, even and sufficiently load-bearing for the weight of the complete mailbox system. Anchor bolts or coach screws are not included and must be selected to suit the wall construction, system weight and local installation situation.

Briefkasten Manufaktur Lippe GmbH
Werler Straße 60
32105 Bad Salzuflen

www.briefkasten-manufaktur.de
info@briefkasten-manufaktur.de
Tel.: +49 5222 807110

Geschäftsführer Oliver Woineck
Ust.ID.Nr. DE303690847
Handelsregister Amtsgericht Lemgo, HRB 8618

Note on weather protection

Mail items must be fully inserted so that the drop flaps can close. The insertion front should, where possible, not face the main weather direction. Under extreme weather conditions, moisture may penetrate despite norm-compliant construction.

Maintenance and BASIC-Plus construction

Stainless steel V2A is low-maintenance and durable. The modular BASIC-Plus construction is designed for straightforward installation and good spare parts availability.

Product properties

Surface/colour	RAL 9005 deep black, RAL 3004 crimson red, DB 703 iron mica, RAL 7016 anthracite grey, RAL of your choice (according to colour table), RAL 9007 grey aluminium, RAL 9016 traffic white
Series	BASIC
Boxes by volume	Normal > 10 litres
Name labelling	Nameplate
Material	Stainless steel V2A 1.4301
House number	House number as laser engraving
Removal of mail	On the front
Mounting type	Surface-mounted
Number of boxes	with 3 letterboxes

Dimensions

Height in mm	490
Height of single box in mm	110.0
Width of single box in mm	300.0
Capacity in litres	12
Height of letterbox slot in mm	35.0
Width of letter slot in mm	265.0
Height of letterbox in mm	330.0
Width of letterbox system in mm	300.0
Total width in mm	400.0
Depth in mm	435.0
Weight in kg	25
Delivery condition	Delivery is made in blocks, freestanding elements / mailbox delivered separately

Dimension drawing

Briefkasten Manufaktur Lippe GmbH
Werler Straße 60
32105 Bad Salzuflen

www.briefkasten-manufaktur.de
info@briefkasten-manufaktur.de
Tel.: +49 5222 807110

Geschäftsführer Oliver Woineck
Ust.ID.Nr. DE303690847
Handelsregister Amtsgericht Lemgo, HRB 8618

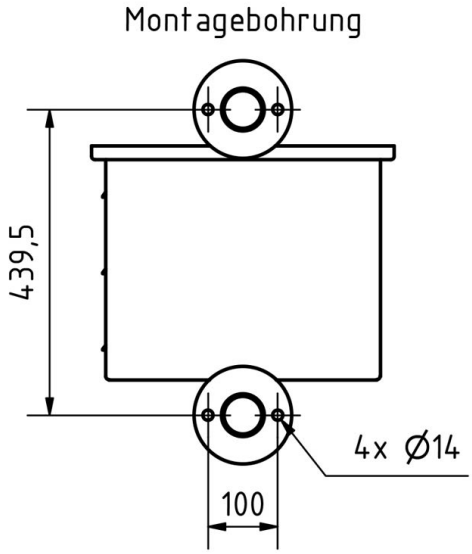

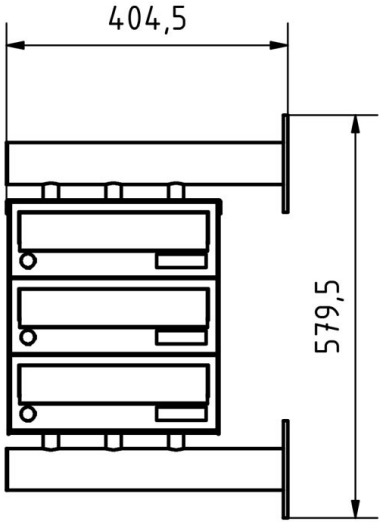

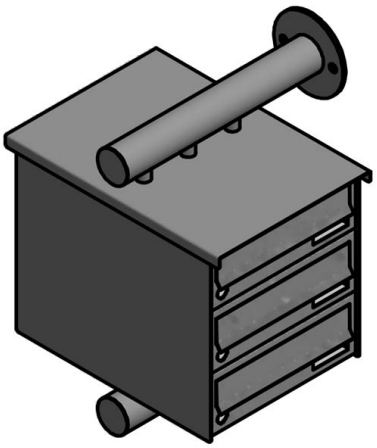

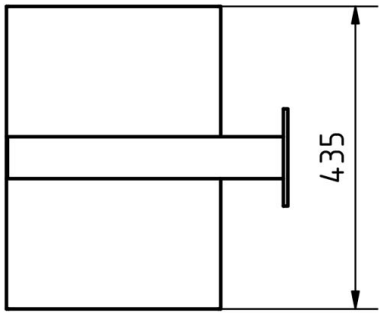

Briefkasten Manufaktur Lippe GmbH
Werler Straße 60
32105 Bad Salzuflen

www.briefkasten-manufaktur.de
info@briefkasten-manufaktur.de
Tel.: +49 5222 807110

Geschäftsführer Oliver Woineck
Ust.ID.Nr. DE303690847
Handelsregister Amtsgericht Lemgo, HRB 8618

More images





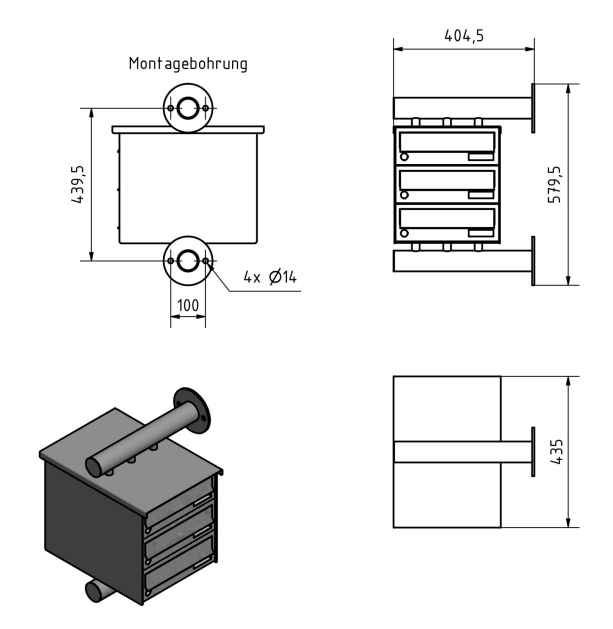



Briefkasten Manufaktur Lippe GmbH
Werler Straße 60
32105 Bad Salzuflen

www.briefkasten-manufaktur.de
info@briefkasten-manufaktur.de
Tel.: +49 5222 807110

Geschäftsführer Oliver Woineck
Ust.ID.Nr. DE303690847
Handelsregister Amtsgericht Lemgo, HRB 8618









Briefkasten Manufaktur Lippe GmbH
Werler Straße 60
32105 Bad Salzuflen

www.briefkasten-manufaktur.de
info@briefkasten-manufaktur.de
Tel.: +49 5222 807110

Geschäftsführer Oliver Woineck
Ust.ID.Nr. DE303690847
Handelsregister Amtsgericht Lemgo, HRB 8618



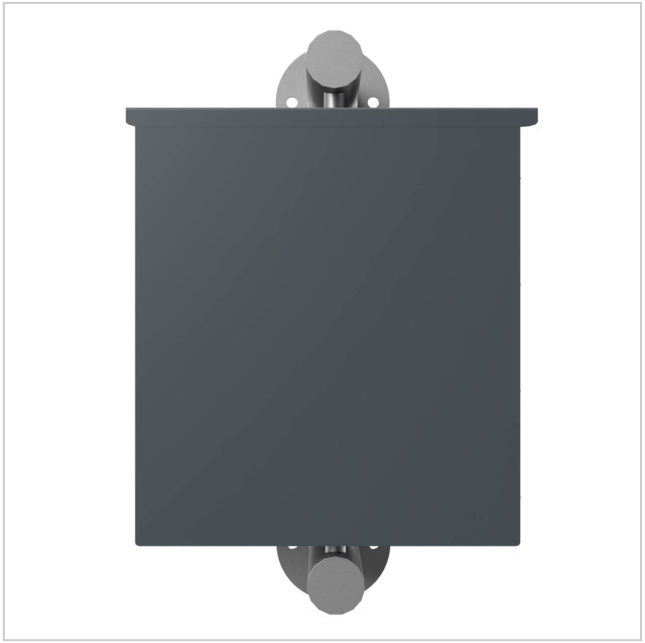



Briefkasten Manufaktur Lippe GmbH
Werler Straße 60
32105 Bad Salzuflen

www.briefkasten-manufaktur.de
info@briefkasten-manufaktur.de
Tel.: +49 5222 807110

Geschäftsführer Oliver Woineck
Ust.ID.Nr. DE303690847
Handelsregister Amtsgericht Lemgo, HRB 8618