4-unit stainless steel freestanding letterbox Design BASIC Plus 385 XP SP with doorbell panel - RAL colour of your choice | ? Colour of your choice | Top | with 4 mailboxes



Product number 385XP-4-SP

Product description

Freestanding mailbox system BASIC Plus 385XP ST-T with bell/intercom unit for 4 households

The freestanding BASIC Plus 385XP ST-T mailbox system for 4 households combines robust stainless steel mailboxes with an integrated bell/intercom unit. Mailbox system and visitor communication are thus brought together in a stable, visually coherent entrance solution for multi-family houses, smaller residential complexes and commercial properties.

The mailboxes are made of stainless steel V2A and are high-quality powder-coated in a RAL colour of choice. Particularly notable are the solid support posts made from anodised aluminium profile: they are also powder-coated, manufactured to be very stable and provide an exceptionally robust base for the entire mailbox system. Stainless steel and solid aluminium combine durability with a clear, high-quality architectural appearance.

Each mailbox measures 300 × 110 × 385 mm (W × H × D) and offers approx. 12 litres of capacity. The 35 × 265 mm insertion slot is designed for DIN C4 items in portrait orientation. A noise-dampening rubber lip on the insertion flap, front mail retrieval, a robust lock and the interchangeable nameplate ensure comfortable everyday use.

The advantages of the BASIC Plus 385XP ST-T system at a glance

Mailbox and bell in one system

4 mailboxes are combined with a bell/intercom unit. This reduces additional individual components at the property entrance and creates a tidy overall appearance.

Solid aluminium support posts

Solidly manufactured anodised aluminium profiles form the particularly robust base of the system. The powder-coated profile construction is designed for high stability and long-term outdoor use.

Briefkasten Manufaktur Lippe GmbH
Werler Straße 60
32105 Bad Salzuflen

www.briefkasten-manufaktur.de
info@briefkasten-manufaktur.de
Tel.: +49 5222 807110

Geschäftsführer Oliver Woineck
Ust.ID.Nr. DE303690847
Handelsregister Amtsgericht Lemgo, HRB 8618

DIN C4 insertion with 12-litre capacity

The 300 × 110 × 385 mm mailboxes each provide approx. 12 litres of mail capacity. The 35 × 265 mm insertion slot accepts DIN C4 mail in portrait orientation.

Bell/intercom unit prepared

The integrated bell/intercom unit provides a central location for doorbell buttons and the integration of compatible intercom technology. The electrical components are configured to suit the planned system.

BASIC Plus – built for high durability

The consistent combination of stainless steel V2A and solid aluminium profiles makes the 385XP a particularly robust mailbox system. The modular construction simplifies installation, maintenance and the later replacement of individual components.

Equipment of the BASIC Plus 385XP ST-T mailbox system

Mailbox system

Number of mailboxes 4 individually lockable mailboxes
Single mailbox 300 × 110 × 385 mm (W × H × D)
Mail capacity Approx. 12 litres per mailbox
Mailbox material Stainless steel V2A, powder-coated in a RAL colour of choice
Insertion slot 35 × 265 mm, suitable for DIN C4 portrait
Manufacture Made in Germany by Briefkasten Manufaktur Lippe

Mail and additional functions

Bell/intercom unit Integrated into the mailbox system
Position Integrated into the system
Doorbell buttons Matching the number of households
Intercom technology Preparation for a compatible door communication solution
Electrical connection To be provided on site according to the chosen intercom technology
Note Intercom system and connection components depend on the selected configuration

Solid aluminium support posts

Support posts Solid anodised aluminium profile, powder-coated
Construction Designed to be particularly robust and load-bearing
Surface RAL colour matching the mailbox system
Installation Freestanding installation on a suitable foundation
Side cladding Close-fitting design
BASIC Plus Modular, maintenance-friendly and installation-oriented construction

Note on the bell/intercom unit

The specific intercom technology, power supply and cabling depend on the chosen door communication solution. Installation and connection should be carried out by suitably qualified professionals.

Briefkasten Manufaktur Lippe GmbH
Werler Straße 60
32105 Bad Salzuflen

www.briefkasten-manufaktur.de
info@briefkasten-manufaktur.de
Tel.: +49 5222 807110

Geschäftsführer Oliver Woineck
Ust.ID.Nr. DE303690847
Handelsregister Amtsgericht Lemgo, HRB 8618

Foundation and safe installation

The solid aluminium support posts require a level and sufficiently load-bearing substrate or an appropriately dimensioned concrete foundation. Foundation size, fixing and alignment must be matched to the system weight, size, ground conditions and local loads.

Note on weather protection

A rain hood, close-fitting side cladding and rain drainage channels support weather protection. Mail items must be fully inserted so that the insertion flaps can close completely.

BASIC Plus – robust and modular

The BASIC Plus design relies on stainless steel V2A and solid aluminium profiles. The modular construction simplifies installation and the later replacement of individual components and is engineered for long service life.

Product properties

Surface/colour	RAL 9005 deep black, RAL 3004 crimson red, DB 703 iron mica, RAL 7016 anthracite grey, RAL of your choice (according to colour table), RAL 9007 grey aluminium, RAL 9016 traffic white
Series	BASIC
Number of bell push buttons	4 buttons
Functions	Light button, Intercom
Functional box prepared for manufacturer	GIRA, Busch Jaeger, Siedle, STR Elektronik, ELCOM, TCS, Ritto, ALGO, Telegärtner, Auerswald, Legrand Bticino, Comelit
Boxes by volume	Normal > 10 litres
Number of boxes	with 4 letterboxes
Name labelling	Nameplate
Material	Aluminium AlMg3 W19, Stainless steel V2A 1.4301
Mounting type	Free-standing
Removal of mail	On the front

Briefkasten Manufaktur Lippe GmbH
Werler Straße 60
32105 Bad Salzuflen

www.briefkasten-manufaktur.de
info@briefkasten-manufaktur.de
Tel.: +49 5222 807110

Geschäftsführer Oliver Woineck
Ust.ID.Nr. DE303690847
Handelsregister Amtsgericht Lemgo, HRB 8618

Dimensions

Height of single box in mm	110.0
Width of single box in mm	300.0
Capacity in litres	12
Height of letterbox slot in mm	35.0
Width of letter slot in mm	265.0
Height of letterbox in mm	660.0
Width of letterbox system in mm	300.0
Overall height in mm	1200.0 | 1600.0
Total width in mm	380.0 (without base plate) | 453.0 (with base plate)
Depth in mm	435.0
Weight in kg	40
Delivery condition	Delivery is made in blocks; stand elements / mailbox are delivered separately.

Dimension drawing

Briefkasten Manufaktur Lippe GmbH
Werler Straße 60
32105 Bad Salzuflen

www.briefkasten-manufaktur.de
info@briefkasten-manufaktur.de
Tel.: +49 5222 807110

Geschäftsführer Oliver Woineck
Ust.ID.Nr. DE303690847
Handelsregister Amtsgericht Lemgo, HRB 8618

Montagebohrungen

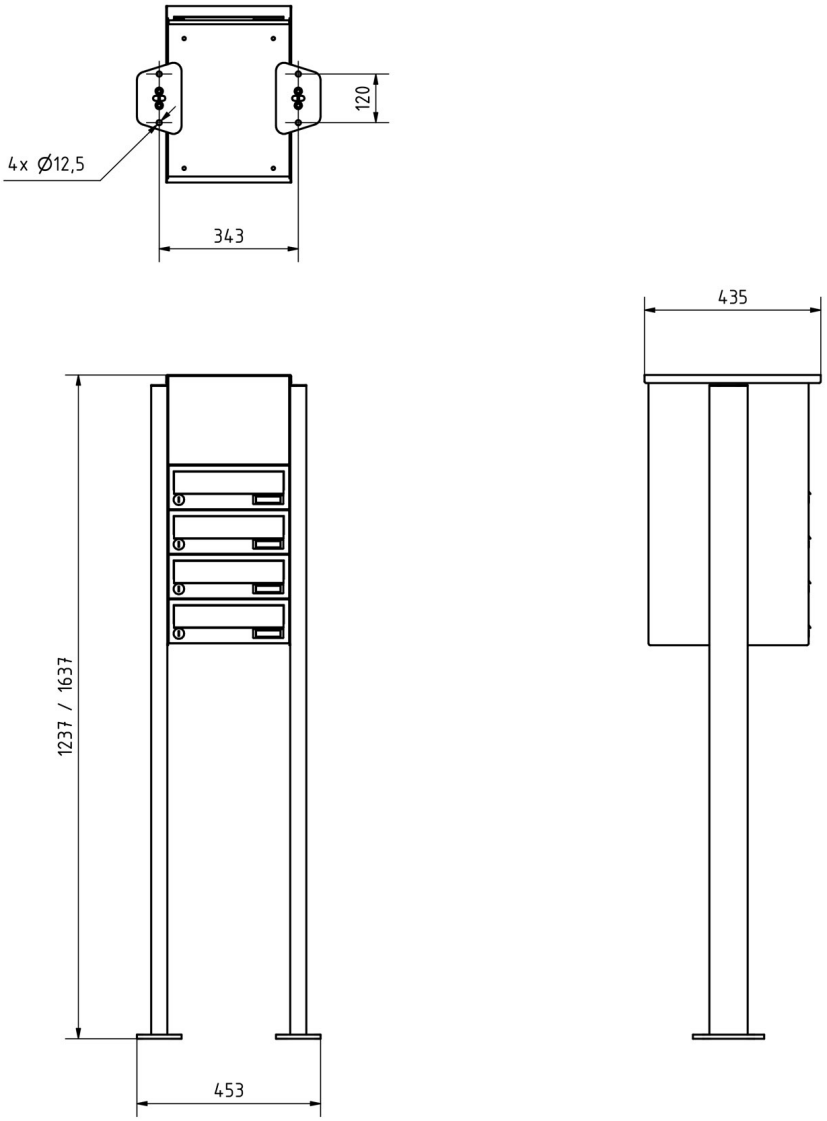

Briefkasten Manufaktur Lippe GmbH
Werler Straße 60
32105 Bad Salzuflen

www.briefkasten-manufaktur.de
info@briefkasten-manufaktur.de
Tel.: +49 5222 807110

Geschäftsführer Oliver Woineck
Ust.ID.Nr. DE303690847
Handelsregister Amtsgericht Lemgo, HRB 8618

More images



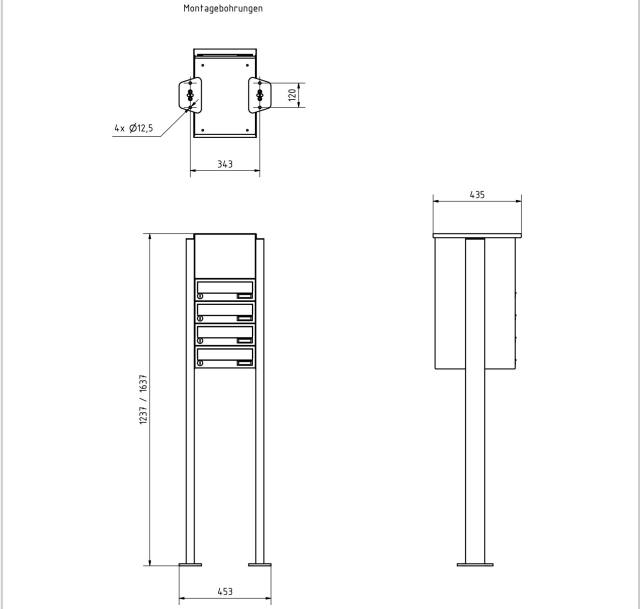





Briefkasten Manufaktur Lippe GmbH
Werler Straße 60
32105 Bad Salzuflen

www.briefkasten-manufaktur.de
info@briefkasten-manufaktur.de
Tel.: +49 5222 807110

Geschäftsführer Oliver Woineck
Ust.ID.Nr. DE303690847
Handelsregister Amtsgericht Lemgo, HRB 8618









Briefkasten Manufaktur Lippe GmbH
Werler Straße 60
32105 Bad Salzuflen

www.briefkasten-manufaktur.de
info@briefkasten-manufaktur.de
Tel.: +49 5222 807110

Geschäftsführer Oliver Woineck
Ust.ID.Nr. DE303690847
Handelsregister Amtsgericht Lemgo, HRB 8618



Briefkasten Manufaktur Lippe GmbH
Werler Straße 60
32105 Bad Salzuflen

www.briefkasten-manufaktur.de
info@briefkasten-manufaktur.de
Tel.: +49 5222 807110

Geschäftsführer Oliver Woineck
Ust.ID.Nr. DE303690847
Handelsregister Amtsgericht Lemgo, HRB 8618