3-mailbox GOETHE system with 3 newspaper and storage compartments to Swiss postal standards – flush-mounted – choice of RAL colour

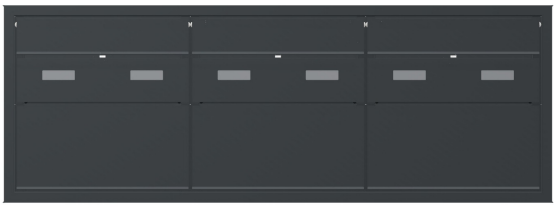

Product number BML3D-9F7CGPYPSC

Product description

GOETHE flush-mounted mailbox system for three households with Push-Key locks and separate newspaper and storage compartments

This mailbox system from the GOETHE series combines three mailboxes with three separate newspaper and storage compartments to Swiss postal standards. This flush-mounted version features a plaster trim frame and is powder-coated in your choice of RAL colour.

Each mailbox is equipped with a keyed-to-differ Push-Key lock and two nameplates. Separate areas for your letters and additional storage are accessible from the front.

Features of this mailbox system

- Overall external dimensions of the system (W × H × D): 1256 × 452 × 411 mm.
- 3 mailboxes and 3 auxiliary boxes serving as newspaper and storage compartments to Swiss postal standards; external dimensions of each box (W × H × D): 400 × 200 × 400 mm.
- Flush mounting with a plaster trim frame made from 1,5 mm V2A 1.4301 stainless steel.
- Body made from 1.4016 stainless steel; panels and frame made from V2A 1.4301 stainless steel.
- Powder-coated finish in your choice of RAL colour.
- Mail retrieval and access to the newspaper and storage compartments from the front.

Special features of this mailbox system

Three keyed-to-differ Push-Key locks

Each of the three mailboxes has a purely mechanical Push-Key lock. To open, insert the key without turning it. To close, push the flap shut.

Each lock has an individual key number and is supplied with two keys. The three mailbox locks are keyed to differ.

Briefkasten Manufaktur Lippe GmbH
Werler Straße 60
32105 Bad Salzuflen

www.briefkasten-manufaktur.de
info@briefkasten-manufaktur.de
Tel.: +49 5222 807110

Geschäftsführer Oliver Woineck
Ust.ID.Nr. DE303690847
Handelsregister Amtsgericht Lemgo, HRB 8618

Two nameplates per mailbox

The system includes a total of six BASIC Type 2 nameplates made from crystal-clear polycarbonate. You can change the inserts from the front.

The selected specification includes the “No advertising, thank you” insert. This allows you to display a notice declining unsolicited advertising alongside your name.

Posting and retrieving mail

The mailboxes feature a damped letter flap for quiet posting, a continuous rubber lip and a rainwater run-off edge. The letter slot also accommodates DIN-C4 envelopes.

The positioning of the lock and retrieval door helps prevent mail from falling out when the door is opened. The height of the letter slot and the tapered chute make unauthorised retrieval through the slot more difficult.

Separate newspaper and storage compartments

The three additional stainless steel compartments hold newspapers and provide storage space. They open upwards from the bottom.

The stated box dimensions are external dimensions, not usable internal dimensions or parcel dimensions. The newspaper and storage compartments are not secure parcel boxes.

Plaster trim frame for a neat wall finish

The plaster trim frame covers the junction between the installation opening and the wall surface. It provides a neat finish for flush mounting and is not a rain canopy.

Individually configurable

Design your mailbox system to suit your home: select “Configure now” to adapt this configuration to your requirements.

- Box finish: customise the colour in the 3D configurator using the colours available for this version.
- Personalised lettering: customise the designated areas with your own names, house numbers or chosen text. Any lettering shown is an example and can be replaced.
- Lettering style: choose from the fonts available for lettering and adjust the appearance in the configurator.
- Equipment: add or change compatible components from the selection available for this system.

When you make individual changes, the dimensions and price are recalculated in the 3D configurator to reflect your selection.

Important information

Water protection: a sheltered location, preferably under a canopy, helps protect your mail. Mail should be inserted fully and the letter flap should be closed.

Installation: check the mounting surface and installation conditions against the overall dimensions and installation instructions.

Briefkasten Manufaktur Lippe GmbH
Werler Straße 60
32105 Bad Salzuflen

www.briefkasten-manufaktur.de
info@briefkasten-manufaktur.de
Tel.: +49 5222 807110

Geschäftsführer Oliver Woineck
Ust.ID.Nr. DE303690847
Handelsregister Amtsgericht Lemgo, HRB 8618

Product properties

Series	GOETHE
Access control	Push-Key
Name labelling	Nameplate
Material	Stainless steel V2A 1.4301, Stainless steel 1.4016 (non-rusting magnetic stainless steel)
Removal of mail	On the front
Surface/colour	RAL of your choice (according to colour table)
Number of boxes	with 3 letterboxes
Mounting type	Flush-mounted

Briefkasten Manufaktur Lippe GmbH
Werler Straße 60
32105 Bad Salzuflen

www.briefkasten-manufaktur.de
info@briefkasten-manufaktur.de
Tel.: +49 5222 807110

Geschäftsführer Oliver Woineck
Ust.ID.Nr. DE303690847
Handelsregister Amtsgericht Lemgo, HRB 8618

Dimensions

Height of single box in mm	200
Width of single box in mm	400
Overall height in mm	452
Total width in mm	1256
Depth in mm	411

Dimension drawing

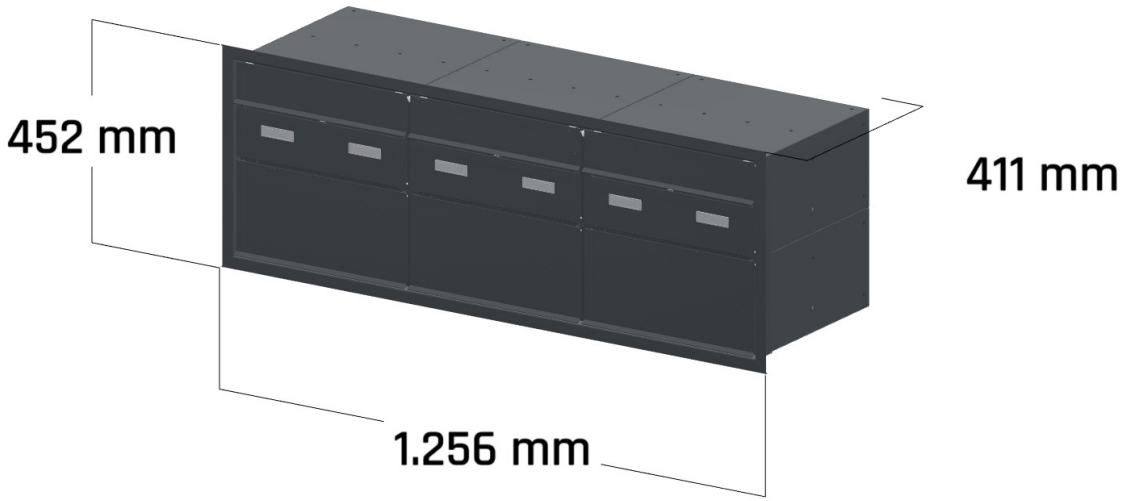

Briefkasten Manufaktur Lippe GmbH
Werler Straße 60
32105 Bad Salzuflen

www.briefkasten-manufaktur.de
info@briefkasten-manufaktur.de
Tel.: +49 5222 807110

Geschäftsführer Oliver Woineck
Ust.ID.Nr. DE303690847
Handelsregister Amtsgericht Lemgo, HRB 8618

More images







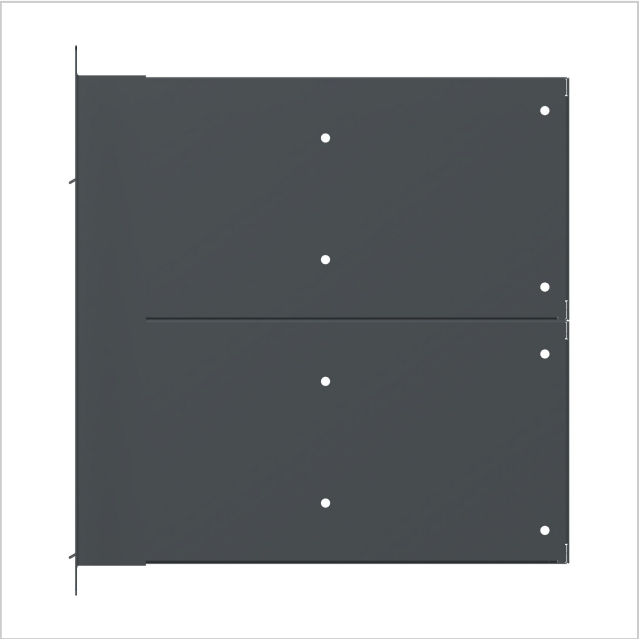

Briefkasten Manufaktur Lippe GmbH
Werler Straße 60
32105 Bad Salzuflen

www.briefkasten-manufaktur.de
info@briefkasten-manufaktur.de
Tel.: +49 5222 807110

Geschäftsführer Oliver Woineck
Ust.ID.Nr. DE303690847
Handelsregister Amtsgericht Lemgo, HRB 8618