3-unit surface-mounted mailbox system Design BASIC 385A- VA AP - V2A stainless steel, brushed | 300x110x385 mm (WxHxD) - ?? Normal 12 litres | Stainless steel, brushed | with 3 mailboxes (1x3)



Product number 385A-VA-3S

Product description

Slim surface-mounted mailbox system BASIC 385A for 3 households – stainless steel V2A, brushed

The BASIC 385A surface-mounted mailbox system for 3 households is a robust wall solution for apartment buildings, smaller residential complexes as well as office and medical practice properties. The vertically organised S-configuration reduces the horizontal space requirement and uses the available wall height particularly efficiently.

The mailbox system is made from high-quality stainless steel V2A with a brushed finish. Mailboxes, cladding and weather hood form a timeless, low-maintenance and robust stainless steel unit.

Each mailbox measures 300 × 110 × 385 mm (W × H × D) and offers approx. 12 litres of volume. The 35 × 265 mm insertion slot is designed for DIN C4 items in portrait orientation. The doors open from left to right; each mailbox is supplied with two keys with key number and an interchangeable nameplate beneath the insertion flap.

The advantages of the BASIC 385A surface-mounted system at a glance

Weather hood and side cladding

The weather hood and side panels unite the individual mailboxes into a closed surface-mounted system. The coordinated cladding provides a calm front and a neat finish on the façade.

DIN C4 insertion and 12 litres volume

The 300 × 110 × 385 mm (W × H × D) mailboxes each offer approx. 12 litres of volume. The 35 × 265 mm insertion slot also accepts larger DIN C4 items in portrait orientation.

Briefkasten Manufaktur Lippe GmbH
Werler Straße 60
32105 Bad Salzuflen

www.briefkasten-manufaktur.de
info@briefkasten-manufaktur.de
Tel.: +49 5222 807110

Geschäftsführer Oliver Woineck
Ust.ID.Nr. DE303690847
Handelsregister Amtsgericht Lemgo, HRB 8618

Quiet insertion and secure allocation

The rubber lip damps the insertion flap. Robust locks, two keys with key number and protected interchangeable nameplates ensure clear allocation of the individual mailboxes.

Mounting rail for wall installation

The surface-mounted system is designed for direct façade installation. A mounting rail simplifies installation; fixings with screws and wall plugs are included in the described configuration.

Entirely in brushed stainless steel

The V2A version combines a high-quality metal surface with a robust construction for durable surface-mounted mailbox systems. The system is manufactured in Germany by Briefkasten Manufaktur Lippe.

Equipment of the BASIC 385A mailbox system

Mailbox system

Number of mailboxes 3 individually lockable compartments
Single compartment 300 × 110 × 385 mm (W × H × D)
Volume Approx. 12 litres per mailbox
Material Stainless steel V2A 1.4301, brushed
Finish Stainless steel V2A 1.4301, brushed
Standard DIN EN 13724

Mail and operation

Insertion slot 35 × 265 mm, suitable for DIN C4 portrait
Insertion flaps With sound-damping rubber lip
Mail retrieval From the front
Door opening From left to right
Keys 2 keys with key number per mailbox
Nameplate Interchangeable nameplate beneath the insertion flap

Cladding and wall mounting

Side cladding Close-fitting design
Weather hood Solid, matching the system
Mounting type Surface-mounted wall installation
Mounting aid Mounting rail
Fixings Screws and wall plugs included; suitability for the on-site wall construction must be checked
Manufacture Made in Germany by Briefkasten Manufaktur Lippe

Note on wall installation

The wall must be flat and sufficiently load-bearing. The supplied screws and wall plugs should only be used if they are suitable for the existing wall construction; for other substrates or external thermal insulation composite systems, appropriate fixing solutions must be determined on site.

Briefkasten Manufaktur Lippe GmbH
Werler Straße 60
32105 Bad Salzuflen

www.briefkasten-manufaktur.de
info@briefkasten-manufaktur.de
Tel.: +49 5222 807110

Geschäftsführer Oliver Woineck
Ust.ID.Nr. DE303690847
Handelsregister Amtsgericht Lemgo, HRB 8618

Note on weather protection

Mail is best protected from moisture and dirt only when items are fully inserted and the insertion flap is closed. Protruding letters or magazines can prevent the flap from closing completely.

Product properties

Series	BASIC
Boxes by volume	Normal > 10 litres
Name labelling	Nameplate
Material	Stainless steel V2A 1.4301
Removal of mail	On the front
Surface/colour	Brushed
Mounting type	Surface-mounted
Number of boxes	with 3 letterboxes

Briefkasten Manufaktur Lippe GmbH
Werler Straße 60
32105 Bad Salzuflen

www.briefkasten-manufaktur.de
info@briefkasten-manufaktur.de
Tel.: +49 5222 807110

Geschäftsführer Oliver Woineck
Ust.ID.Nr. DE303690847
Handelsregister Amtsgericht Lemgo, HRB 8618

Dimensions

Height of single box in mm	110.0
Width of single box in mm	300.0
Capacity in litres	12
Height of letterbox slot in mm	35.0
Width of letter slot in mm	265.0
Height of letterbox in mm	330.0
Width of letterbox system in mm	300.0
Total width in mm	308.0
Depth in mm	435.0
Weight in kg	20
Delivery condition	Delivered fully assembled

Briefkasten Manufaktur Lippe GmbH
Werler Straße 60
32105 Bad Salzuflen

www.briefkasten-manufaktur.de
info@briefkasten-manufaktur.de
Tel.: +49 5222 807110

Geschäftsführer Oliver Woineck
Ust.ID.Nr. DE303690847
Handelsregister Amtsgericht Lemgo, HRB 8618

Dimension drawing

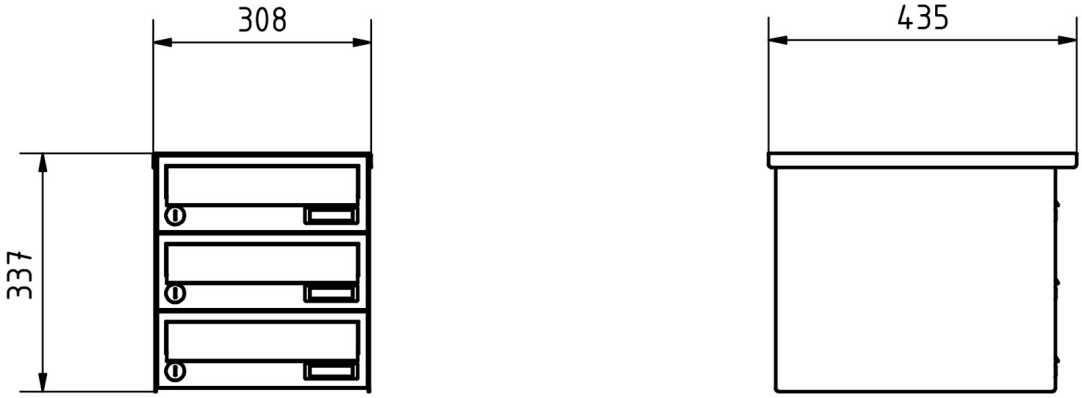

Briefkasten Manufaktur Lippe GmbH
Werler Straße 60
32105 Bad Salzuflen

www.briefkasten-manufaktur.de
info@briefkasten-manufaktur.de
Tel.: +49 5222 807110

Geschäftsführer Oliver Woineck
Ust.ID.Nr. DE303690847
Handelsregister Amtsgericht Lemgo, HRB 8618

More images





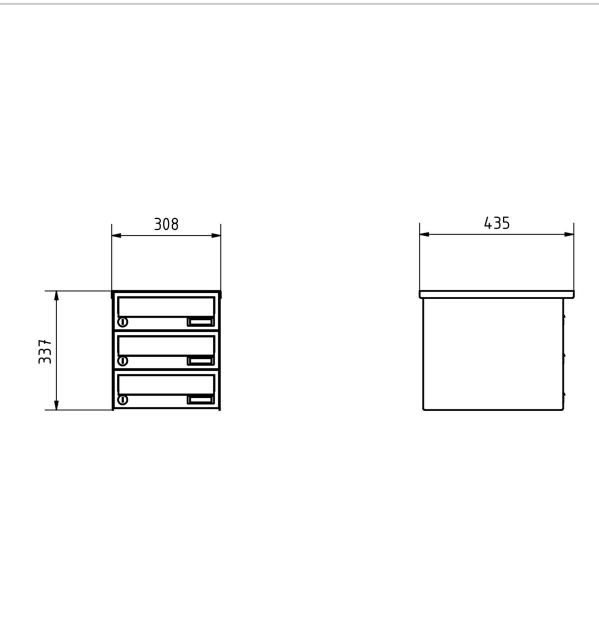



Briefkasten Manufaktur Lippe GmbH
Werler Straße 60
32105 Bad Salzuflen

www.briefkasten-manufaktur.de
info@briefkasten-manufaktur.de
Tel.: +49 5222 807110

Geschäftsführer Oliver Woineck
Ust.ID.Nr. DE303690847
Handelsregister Amtsgericht Lemgo, HRB 8618



Briefkasten Manufaktur Lippe GmbH
Werler Straße 60
32105 Bad Salzuflen

www.briefkasten-manufaktur.de
info@briefkasten-manufaktur.de
Tel.: +49 5222 807110

Geschäftsführer Oliver Woineck
Ust.ID.Nr. DE303690847
Handelsregister Amtsgericht Lemgo, HRB 8618