Flush-mounted letterbox BASIC 382U UP - RAL 7016 anthracite grey | RAL 7016 Anthracite grey, fine texture, matt | 100mm depth | with 1 mailbox



Product number 382U-7016-1-100

Product description

Recessed letterbox BASIC 382U UP - RAL 7016 anthracite grey

Modern recessed letterbox - made in Germany by Briefkasten Manufaktur.

The letterbox is made of galvanised steel, powder-coated in anthracite grey RAL 7016. The very high-quality workmanship and the well thought-out design make this recessed letterbox one of our top sellers. A rain drip edge for optimal water protection, a continuous rubber lip for quiet insertion, the sturdy interchangeable nameplate, a practical post retention bracket and the very robust lock characterise this recessed letterbox. The recessed frame made of stainless steel V2A is fitted with a sponge rubber seal and guarantees very high durability.

Thanks to the design, DIY installation is straightforward.

- Recessed letterbox made of galvanised steel, powder-coated in anthracite grey RAL 7016.
- The unit is manufactured by Briefkasten Manufaktur. German quality production "Made in Germany".
- The letterbox complies with DIN/EN 13724. Insertion size (3.5 cm x 32.5 cm) for C4 landscape — large envelopes also fit without folding.
- Insertion flap with noise-damping rubber seal for very quiet posting.
- The door opens from left to right.
- Includes 2 keys with key number, interchangeable nameplate (type 2) under the insertion flap and post retention bracket.
- Large capacity thanks to optional letterbox depth +50 mm = approx. 17 l. Suitable for businesses and households with very high volumes of post.
- Plaster cover frame made of stainless steel angle profile 25 x 58 mm, powder-coated in RAL colour.

Important information:

Post is only protected from moisture and soiling when fully inserted and the flap is closed. Under certain extreme weather conditions water may still enter (per DIN EN 13724 up to 1 cm^3). This is not a reason for complaint.

Briefkasten Manufaktur Lippe GmbH
Werler Straße 60
32105 Bad Salzuflen

www.briefkasten-manufaktur.de
info@briefkasten-manufaktur.de
Tel.: +49 5222 807110

Geschäftsführer Oliver Woineck
Ust.ID.Nr. DE303690847
Handelsregister Amtsgericht Lemgo, HRB 8618

Product properties

Material	Steel, galvanised
Series	BASIC
Boxes by volume	Normal > 10 litres
Name labelling	Nameplate
Surface/colour	RAL 7016 anthracite grey
Removal of mail	On the front
Number of boxes	with 1 letterbox
Mounting type	Flush-mounted

Dimensions

Height of single box in mm	330.0
Width of single box in mm	355.0
Capacity in litres	12.0 | 17.0
Height of letterbox slot in mm	35.0
Width of letter slot in mm	325.0
Height of letterbox in mm	380.0
Width of letterbox system in mm	405.0
Total width in mm	405.0
Depth in mm	100.0 | 150.0
Weight in kg	6
Delivery condition	Delivered fully assembled.

Briefkasten Manufaktur Lippe GmbH
Werler Straße 60
32105 Bad Salzuflen

www.briefkasten-manufaktur.de
info@briefkasten-manufaktur.de
Tel.: +49 5222 807110

Geschäftsführer Oliver Woineck
Ust.ID.Nr. DE303690847
Handelsregister Amtsgericht Lemgo, HRB 8618

More images







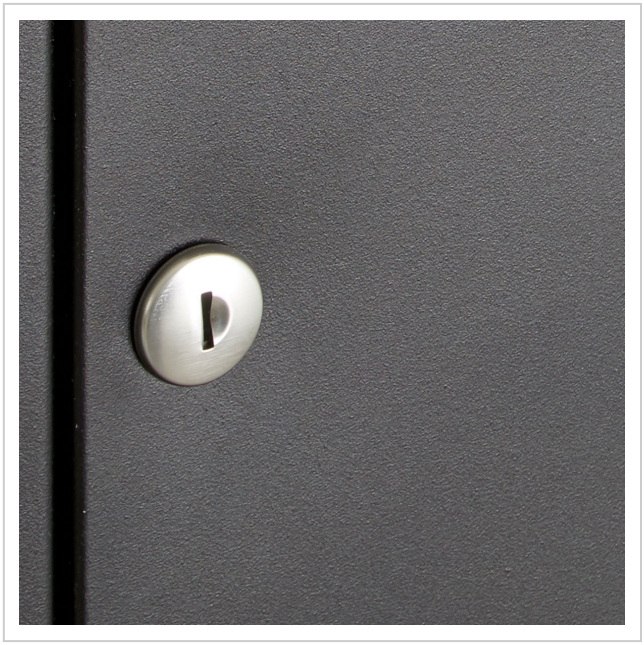

Briefkasten Manufaktur Lippe GmbH
Werler Straße 60
32105 Bad Salzuflen

www.briefkasten-manufaktur.de
info@briefkasten-manufaktur.de
Tel.: +49 5222 807110

Geschäftsführer Oliver Woineck
Ust.ID.Nr. DE303690847
Handelsregister Amtsgericht Lemgo, HRB 8618



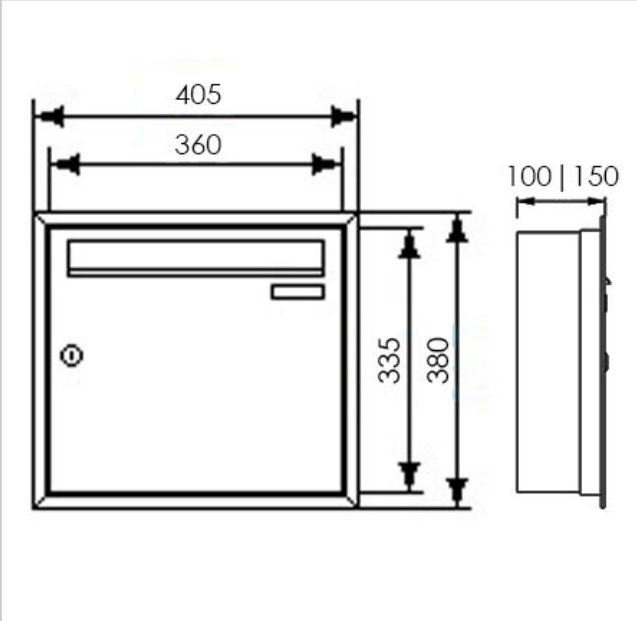



Briefkasten Manufaktur Lippe GmbH
Werler Straße 60
32105 Bad Salzuflen

www.briefkasten-manufaktur.de
info@briefkasten-manufaktur.de
Tel.: +49 5222 807110

Geschäftsführer Oliver Woineck
Ust.ID.Nr. DE303690847
Handelsregister Amtsgericht Lemgo, HRB 8618