6-unit 2x3 freestanding mailbox system GOETHE ST-Q-400 - RAL colour of your choice | 400mm depth | with 6 letterboxes (2x3)



Product number 215-STQ-6-400

Product description

6-unit 2x3 freestanding mailbox system GOETHE ST-Q-400 - RAL colour of your choice

Freestanding 6-part mailbox system with horizontal boxes 400mm deep and elegant rectangular stand elements. The modern GOETHE mailbox is ideal for sophisticated entrance areas. The straight-lined design without a visible lock makes this mailbox appear particularly elegant.

The dimensions of the individual boxes provide a capacity of approximately 32 litres; the large slot ensures that even DIN C4 envelopes and magazines, or post accumulated during several days away, remain uncreased. The innovative Push-Key lock is concealed inside the mailbox. The key is simply inserted into the existing opening (no turning necessary) and the door opens. The arrangement of the lock is designed so that the retrieval door prevents the mail from falling out towards you. Thanks to the water run-off edge, the mail inside is optimally protected from the elements. The insertion flap is equipped with high-quality hinge dampers, ensuring a quiet closing and preventing annoying rattling caused by weather. The replaceable Plexiglas nameplates can be conveniently operated from the front; for an optimal appearance we recommend the flush-mounted nameplate with laser engraving (see Accessories). The second nameplate is fitted with an advertising Yes/No insert.

The mailbox systems of the GOETHE collection are characterised by the consistent use of stainless steel and aluminium. The result is very high durability and sustainability. The design has been developed by our own engineers with a view to high flexibility and modularity, easy spare-part replacement and straightforward self-installation. Spare parts for all GOETHE systems are available directly from our shop.

Thanks to the design, self-installation is straightforward.

Protected utility model according to DPMA file number DE: 20 2021 101 679.5

Briefkasten Manufaktur Lippe GmbH
Werler Straße 60
32105 Bad Salzuflen

www.briefkasten-manufaktur.de
info@briefkasten-manufaktur.de
Tel.: +49 5222 807110

Geschäftsführer Oliver Woineck
Ust.ID.Nr. DE303690847
Handelsregister Amtsgericht Lemgo, HRB 8618

- 6-unit freestanding mailbox system in stainless steel and aluminium.
- Mailboxes made of stainless steel 1.4016 (corrosion-resistant magnetic stainless steel), powder-coated in a RAL colour of your choice.
- Quality manufacturing - Made in Germany by Briefkasten Manufaktur Lippe.
- Innovative Push-Key lock with 2 keys per unit.
- Letter insertion and retrieval are from the front. Insertion flap with high-quality hinge dampers for very quiet posting.
- The mailboxes comply with DIN/EN 13724. Insertion size (3.5 cm x 36.0 cm) for C4 landscape; large letters fit without being folded.
- Retrieval doors open from top to bottom. This prevents the mail from falling out towards you.
- Plexiglas nameplate for name inscription and second nameplate with advertising Yes/No per unit.
- Optimal protection from rain through rain run-off edges and a rain canopy made from 3 mm aluminium AlMg3 W19, powder-coated in a RAL colour of your choice.
- Side cladding made from 3 mm aluminium AlMg3 W19, powder-coated in a RAL colour of your choice.
- Rear panel made from 1 mm stainless steel V2A 1.4301, powder-coated in a RAL colour of your choice.
- The W 40 mm x D 80 mm stand posts are made from 2 mm stainless steel V2A 1.4301, powder-coated in a RAL colour, for concreting in or for screw mounting.

Important information:

To achieve optimal water protection for your mail, the mailbox or mailbox system should, where possible, be located under a canopy.

Mail is only protected from water if it is placed completely inside the box and the insertion flap is closed. Partially inserted mail allows moisture and dirt to enter the mailbox. This system is protected against water ingress according to DIN EN 13724. Water ingress is not grounds for a complaint.

Product properties

Surface/colour	RAL 9005 deep black, RAL 3004 crimson red, DB 703 iron mica, RAL 7016 anthracite grey, RAL of your choice (according to colour table), RAL 9007 grey aluminium, RAL 9016 traffic white
Series	GOETHE
Number of boxes	with 6 letterboxes
Name labelling	Nameplate
Material	Aluminium AlMg3 W19, Stainless steel V2A 1.4301, Stainless steel 1.4016 (non-rusting magnetic stainless steel)
Mounting type	Free-standing
Removal of mail	On the front
Boxes by volume	Large > 16 litres

Briefkasten Manufaktur Lippe GmbH
Werler Straße 60
32105 Bad Salzuflen

www.briefkasten-manufaktur.de
info@briefkasten-manufaktur.de
Tel.: +49 5222 807110

Geschäftsführer Oliver Woineck
Ust.ID.Nr. DE303690847
Handelsregister Amtsgericht Lemgo, HRB 8618

Dimensions

Width in mm	1
Height in mm	1
Height of single box in mm	200,0
Width of single box in mm	400,0
Capacity in litres	32
Height of letterbox slot in mm	35,0
Width of letter slot in mm	360,0
Height of letterbox in mm	600,0
Width of letterbox system in mm	800,0
Overall height in mm	1200,0 | 1500,0 | 1700,0 + 23,0
Total width in mm	888,0
Depth in mm	400.0 + 25.0 Rain roof
Weight in kg	85
Delivery condition	Supplied in blocks, stand elements / letterbox divided

Dimension drawing

Briefkasten Manufaktur Lippe GmbH
Werler Straße 60
32105 Bad Salzuflen

www.briefkasten-manufaktur.de
info@briefkasten-manufaktur.de
Tel.: +49 5222 807110

Geschäftsführer Oliver Woineck
Ust.ID.Nr. DE303690847
Handelsregister Amtsgericht Lemgo, HRB 8618

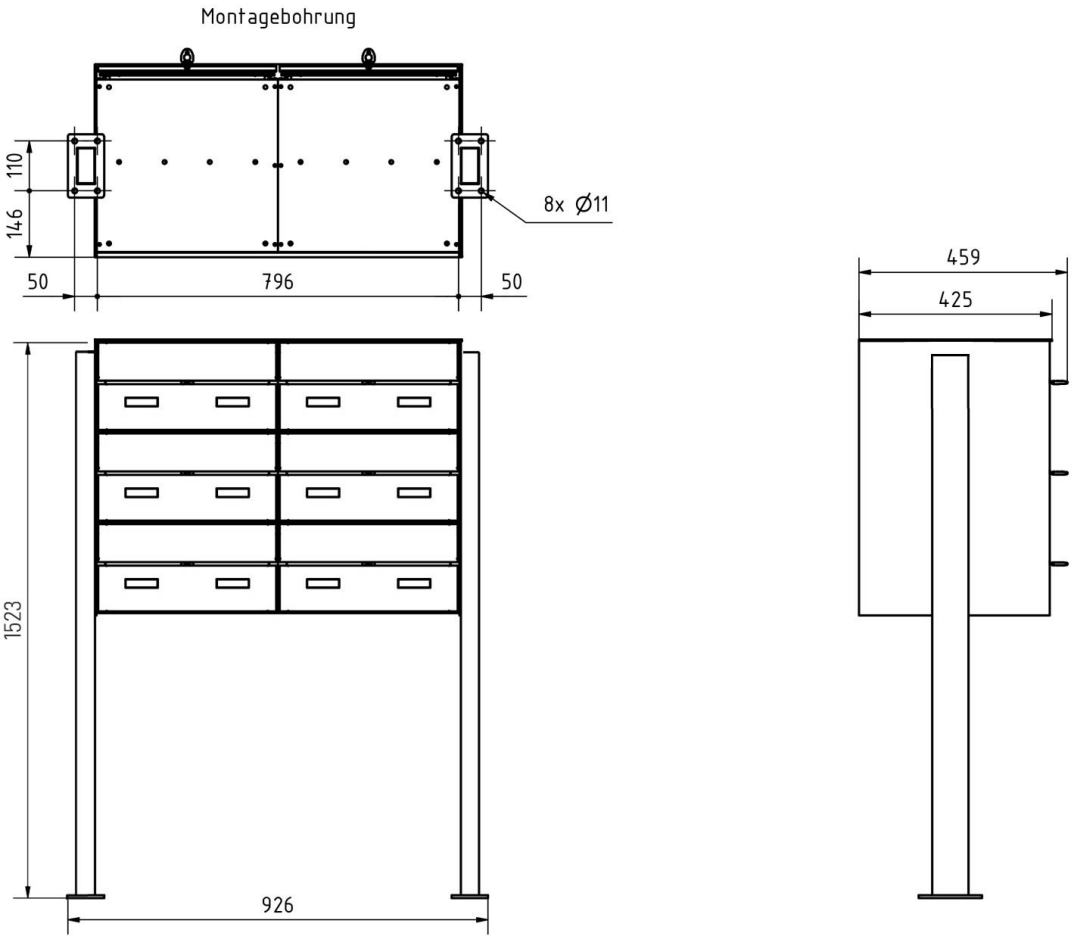

Briefkasten Manufaktur Lippe GmbH
Werler Straße 60
32105 Bad Salzuflen

www.briefkasten-manufaktur.de
info@briefkasten-manufaktur.de
Tel.: +49 5222 807110

Geschäftsführer Oliver Woineck
Ust.ID.Nr. DE303690847
Handelsregister Amtsgericht Lemgo, HRB 8618

More images







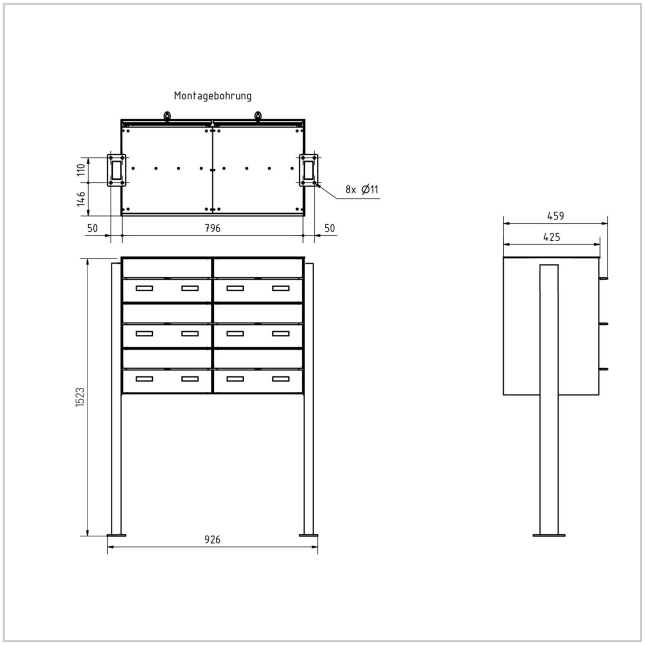

Briefkasten Manufaktur Lippe GmbH
Werler Straße 60
32105 Bad Salzuflen

www.briefkasten-manufaktur.de
info@briefkasten-manufaktur.de
Tel.: +49 5222 807110

Geschäftsführer Oliver Woineck
Ust.ID.Nr. DE303690847
Handelsregister Amtsgericht Lemgo, HRB 8618





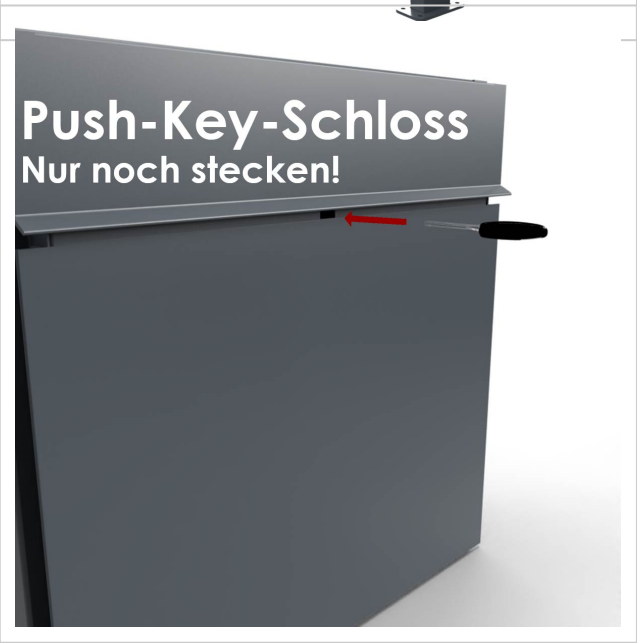

Briefkasten Manufaktur Lippe GmbH
Werler Straße 60
32105 Bad Salzuflen

www.briefkasten-manufaktur.de
info@briefkasten-manufaktur.de
Tel.: +49 5222 807110

Geschäftsführer Oliver Woineck
Ust.ID.Nr. DE303690847
Handelsregister Amtsgericht Lemgo, HRB 8618