4-piece stainless steel flush-mounted letterbox system BASIC Plus 382XU UP with bell box on the side | Left | 100mm depth | Stainless steel, brushed | with 4 mailboxes



Product number 382XU-VA-4-SPS-L-100

Product description

4-compartment stainless steel recessed letterbox system BASIC Plus 382XU UP with side bell panel - brushed stainless steel

Modern recessed letterbox for 4 households - made in Germany by Briefkasten Manufaktur.

The letterbox is made entirely of stainless steel V2A, brushed. The very high-quality workmanship and the well thought-out concept make this recessed letterbox one of our top sellers. A rain-drip edge for optimal water protection, a continuous rubber lip for quiet insertion, the robust exchangeable nameplate, a practical mail-holding bracket and the very durable lock characterise this recessed letterbox. The recessed frame made of stainless steel V2A is fitted with a foam rubber seal and guarantees very high longevity.

The letterbox systems of the BASIC Plus collection are characterised by the consistent use of stainless steel V2A. The result is very high durability and sustainability. The construction has been developed by our own engineers with a view to high flexibility and modularity, easy spare-part replacement and uncomplicated self-installation. Spare parts are available directly for all BASIC Plus systems.

Briefkasten Manufaktur Lippe GmbH
Werler Straße 60
32105 Bad Salzuflen

www.briefkasten-manufaktur.de
info@briefkasten-manufaktur.de
Tel.: +49 5222 807110

Geschäftsführer Oliver Woineck
Ust.ID.Nr. DE303690847
Handelsregister Amtsgericht Lemgo, HRB 8618

- **4-way recessed letterbox system made entirely of stainless steel V2A 1.4301, 240-grit brushed finish**
- The system is manufactured by Briefkasten Manufaktur. German quality production "Made in Germany".
- The letterboxes comply with DIN/EN 13724. Insertion size (3.5 cm x 32.5 cm) for C4 landscape; large envelopes will fit in without folding.
- Insertion flap with noise-dampening rubber seal for very quiet posting of mail.
- The door opens from left to right.
- Includes 2 keys with key number, interchangeable nameplate (Type 2) under the insertion flap and mail-holding bracket.
- Large capacity through optional mailbox depth +50 mm = approx. 17 litres. Suitable for businesses and households with very high mail volume.
- **Bell panel made of stainless steel V2A, 240-grit brushed finish**
- Intercom cut-out with universal adapter. (Intercom system/in-wall speaker not included). Also available without intercom cut-out.
- The universal adapter is suitable for all common in-wall speakers (Siedle, Ritto, TCS, Busch-Jäger, Gira, Legrand Bticino, ELCOM, Auerswald, Comelit and many more).
- Round stainless steel bell push type: Grothe Protact, max. 24 V AC/DC, 1.5 A, IP 54 (force-limited).
- Anti-vandalism - The nameplate is impact-resistant and shatterproof; the plastic is flame-retardant.
- Plaster cover frame made from stainless steel angle profile 25 x 58 mm, 240-grit brushed finish.

Important information

Preparation for camera or intercom station

The intercom systems must be connected by a qualified electrician. Please contact the electrician of your choice for planning, installation and commissioning.

Water protection

Mail is only protected from moisture and dirt when fully inserted and the flap is closed. Under certain extreme weather conditions water may still enter (according to DIN EN 13724 up to 1 cm^3). This is not a reason for complaint.

Product properties

Series	BASIC
Number of bell push buttons	4 buttons
Functions	Light button, Intercom
Functional box prepared for manufacturer	GIRA, Busch Jaeger, Siedle, STR Elektronik, ELCOM, TCS, Ritto, ALGO, Telegärtner, Auerswald, Legrand Bticino, Comelit
Boxes by volume	Normal > 10 litres
Number of boxes	with 4 letterboxes
Name labelling	Nameplate
Material	Stainless steel V2A 1.4301
Removal of mail	On the front
Surface/colour	Brushed
Mounting type	Flush-mounted

Briefkasten Manufaktur Lippe GmbH
Werler Straße 60
32105 Bad Salzuflen

www.briefkasten-manufaktur.de
info@briefkasten-manufaktur.de
Tel.: +49 5222 807110

Geschäftsführer Oliver Woineck
Ust.ID.Nr. DE303690847
Handelsregister Amtsgericht Lemgo, HRB 8618

Dimensions

Height of single box in mm	330.0
Width of single box in mm	355.0
Capacity in litres	12.0 | 17.0
Height of letterbox slot in mm	35.0
Width of letter slot in mm	325.0
Height of letterbox in mm	710.0
Width of letterbox system in mm	930.0
Total width in mm	930.0
Depth in mm	100.0 | 150.0
Weight in kg	34
Delivery condition	Delivered fully assembled

Briefkasten Manufaktur Lippe GmbH
Werler Straße 60
32105 Bad Salzuflen

www.briefkasten-manufaktur.de
info@briefkasten-manufaktur.de
Tel.: +49 5222 807110

Geschäftsführer Oliver Woineck
Ust.ID.Nr. DE303690847
Handelsregister Amtsgericht Lemgo, HRB 8618

More images

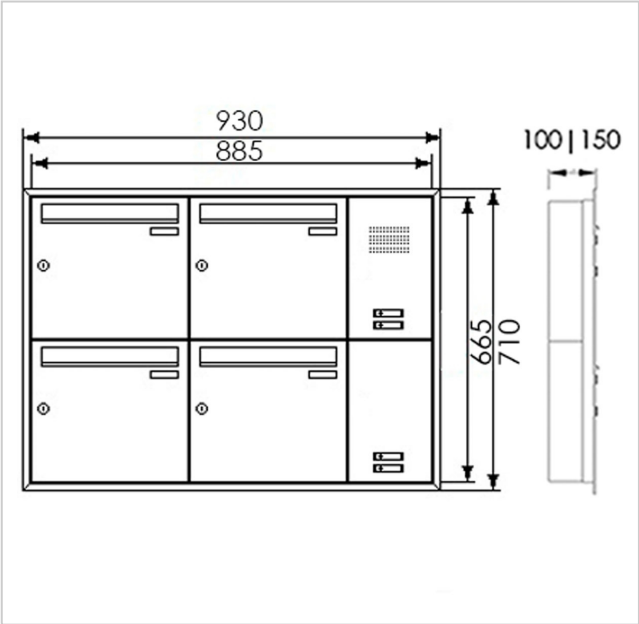







Briefkasten Manufaktur Lippe GmbH
Werler Straße 60
32105 Bad Salzuflen

www.briefkasten-manufaktur.de
info@briefkasten-manufaktur.de
Tel.: +49 5222 807110

Geschäftsführer Oliver Woineck
Ust.ID.Nr. DE303690847
Handelsregister Amtsgericht Lemgo, HRB 8618









Briefkasten Manufaktur Lippe GmbH
Werler Straße 60
32105 Bad Salzuflen

www.briefkasten-manufaktur.de
info@briefkasten-manufaktur.de
Tel.: +49 5222 807110

Geschäftsführer Oliver Woineck
Ust.ID.Nr. DE303690847
Handelsregister Amtsgericht Lemgo, HRB 8618