4-unit surface-mounted mailbox BASIC Plus 382X AP with side-mounted doorbell box - RAL colour of your choice | Left | 100mm depth | ? Colour of your choice | with 4 mailboxes (2x2)



Product number 382XA-4W-SP-100-L

Product description

4-unit surface-mounted mailbox BASIC Plus 382X AP with side-mounted bell box - RAL colour of choice

German quality manufacture "Made in Germany" by Briefkasten Manufaktur. The complete surface-mounted mailbox is made of weather-resistant stainless steel V2A, powder-coated in RAL colour. A rain drip edge for optimal water protection, a double-folded letter flap with rubber buffer, the solid interchangeable nameplate, a practical post-retaining bracket and the very robust lock distinguish this stainless steel mailbox.

The mailbox systems of the BASIC Plus collection are characterised by the consistent use of stainless steel V2A. The result is very high durability and sustainability. The construction has been developed by our own engineers with a view to high flexibility and modularity, easy spare-parts installation and straightforward self-assembly. Spare parts for all BASIC Plus systems are directly available.

Thanks to the design, self-assembly is straightforward. The mailbox system is prepared for uncomplicated complete installation; there is no need for time-consuming wall mounting of individual boxes. 4-unit surface-mounted mailbox made of high-quality, weather-resistant stainless steel V2A 1.4301, powder-coated in RAL colour of choice.

Benefits at a glance

Close-fitting stainless steel cladding with rain canopy

Side cladding and rain canopy are included in this version and are made of stainless steel V2A, powder-coated in RAL colour. The close-fitting design forms a closed, structurally coordinated unit with the mailbox system.

Generous letter slot

Briefkasten Manufaktur Lippe GmbH
Werler Straße 60
32105 Bad Salzuflen

www.briefkasten-manufaktur.de
info@briefkasten-manufaktur.de
Tel.: +49 5222 807110

Geschäftsführer Oliver Woineck
Ust.ID.Nr. DE303690847
Handelsregister Amtsgericht Lemgo, HRB 8618

The slot measures 35 × 325 mm and is designed for DIN C4 landscape. The mailbox version complies with DIN EN 13724.

Quiet insertion and convenient retrieval

The integrated flap damping with rubber buffer reduces impact noise during insertion. The post-retaining bracket holds items in place during retrieval.

Integrated bell and intercom section

Bell box made of stainless steel V2A 1.4301, powder-coated in RAL colour. The doorbell button used is the stainless steel doorbell button Type 4. Optionally prepared with a speaking grille for the installation of standard intercom systems or built-in speakers. (Intercom system/built-in speaker not included). A version with the Comelit Ultra video complete set is also available as an option.

Quality manufacturing and well-thought-out construction

The system is manufactured at the Briefkasten Manufaktur in Germany. The construction is designed for straightforward self-assembly.

Equipment and product details

Mailbox system

Number of mailboxes 4 separately usable mail compartments
Arrangement 2 × 2
Depth 100 mm
Mailbox material Stainless steel V2A 1.4301
Mailbox finish Powder-coated in RAL colour of choice
Bell/intercom section Bell box made of stainless steel V2A 1.4301, powder-coated in RAL colour

Mail and operation

Letter slot 35 × 325 mm, suitable for DIN C4 landscape
Standard DIN EN 13724
Letter flap Sound-damped by rubber buffer
Keys 2 keys with key number per mailbox
Nameplate Interchangeable nameplate below the letter flap
Post-retaining bracket Integrated per mailbox

Mounting and equipment

Mounting type Surface-mounted
Rain drip edge Integrated into the construction
Rain canopy Made of stainless steel V2A, powder-coated in RAL colour of choice
Side cladding Made of stainless steel V2A, powder-coated in RAL colour of choice
Mounting material For wall mounting incl. mounting rail and fastening material (screws + wall plugs)
Manufacture Made in Germany by Briefkasten Manufaktur Lippe

Note on weather protection

The mail is best protected from moisture and dirt when fully inserted and with the letter flap closed. Protruding items may prevent the flap from fully closing.

Note on wall mounting

Before mounting, the load-bearing capacity and condition of the wall must be checked. The fixings must be matched to the weight of the unit and the existing wall construction.

Product properties

Surface/colour	RAL 9005 deep black, RAL 3004 crimson red, DB 703 iron mica, RAL 7016 anthracite grey, RAL of your choice (according to colour table), RAL 9007 grey aluminium, RAL 9016 traffic white
Series	BASIC
Number of bell push buttons	4 buttons
Functions	Light button, Intercom
Functional box prepared for manufacturer	GIRA, Busch Jaeger, Siedle, STR Elektronik, ELCOM, TCS, Ritto, ALGO, Telegärtner, Auerswald, Legrand Bticino, Comelit
Boxes by volume	Normal > 10 litres
Number of boxes	with 4 letterboxes
Name labelling	Nameplate
Material	Stainless steel V2A 1.4301
Removal of mail	On the front
Mounting type	Surface-mounted

Dimensions

Height of single box in mm	330.0
Width of single box in mm	355.0
Capacity in litres	12.0 | 17.0
Height of letterbox slot in mm	35.0
Width of letter slot in mm	325.0
Height of letterbox in mm	660.0
Width of letterbox system in mm	880.0
Total width in mm	880.0
Depth in mm	100.0 | 150.0
Weight in kg	12

Briefkasten Manufaktur Lippe GmbH
Werler Straße 60
32105 Bad Salzuflen

www.briefkasten-manufaktur.de
info@briefkasten-manufaktur.de
Tel.: +49 5222 807110

Geschäftsführer Oliver Woineck
Ust.ID.Nr. DE303690847
Handelsregister Amtsgericht Lemgo, HRB 8618

More images



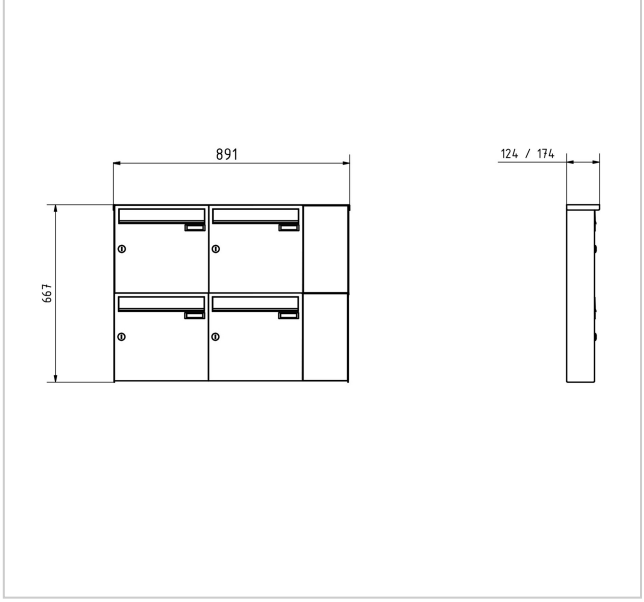





Briefkasten Manufaktur Lippe GmbH
Werler Straße 60
32105 Bad Salzuflen

www.briefkasten-manufaktur.de
info@briefkasten-manufaktur.de
Tel.: +49 5222 807110

Geschäftsführer Oliver Woineck
Ust.ID.Nr. DE303690847
Handelsregister Amtsgericht Lemgo, HRB 8618





Briefkasten Manufaktur Lippe GmbH
Werler Straße 60
32105 Bad Salzuflen

www.briefkasten-manufaktur.de
info@briefkasten-manufaktur.de
Tel.: +49 5222 807110

Geschäftsführer Oliver Woineck
Ust.ID.Nr. DE303690847
Handelsregister Amtsgericht Lemgo, HRB 8618