5er 2x3 stainless steel flush-mounted letterbox system BASIC Plus 382XU UP - polished stainless steel - 5 parties | 100mm depth | with 5 letterboxes (2x3) | Stainless steel, brushed



Product number 382XU-VA-5S-100

Product description

5-unit 2x3 stainless steel flush-mounted mailbox system BASIC Plus 382XU UP - brushed stainless steel - for 5 households

Modern flush-mounted mailbox for 5 households - made in Germany by Briefkasten Manufaktur.

The mailbox is made entirely of stainless steel V2A, brushed. The very high-quality workmanship and the well-thought-out concept make this flush-mounted mailbox one of our top sellers. A rain drainage edge for optimal water protection, a continuous rubber lip for quiet posting, the solid replaceable nameplate, a practical mail retention bar and the very robust lock characterise this flush-mounted mailbox. The flush-mount frame made of stainless steel V2A is equipped with a foam rubber seal and guarantees very high durability.

The mailbox systems of the BASIC Plus collection are characterised by the consistent use of stainless steel V2A. The result is very high durability and sustainability. The construction has been developed by our own engineers with regard to high flexibility/modularity, easy spare-part assembly and uncomplicated self-installation. Spare parts are directly available for all BASIC Plus systems.

Briefkasten Manufaktur Lippe GmbH
Werler Straße 60
32105 Bad Salzuflen

www.briefkasten-manufaktur.de
info@briefkasten-manufaktur.de
Tel.: +49 5222 807110

Geschäftsführer Oliver Woineck
Ust.ID.Nr. DE303690847
Handelsregister Amtsgericht Lemgo, HRB 8618

- 5-compartment flush-mounted mailbox system completely made of stainless steel V2A 1.4301, 240-grit brushed finish.
- The system is manufactured by Briefkasten Manufaktur. German quality production "Made in Germany".
- The mailboxes comply with DIN/EN 13724. Insertion size (3.5 cm x 32.5 cm) for C4 landscape; large letters also fit without folding.
- Insertion flap with noise-damping rubber seal for very quiet posting of mail.
- The door opens from left to right.
- Includes 2 keys with key number, replaceable nameplate (type 2) under the insertion flap and a mail retention bar.
- Large capacity through optional mailbox depth +50 mm = approx. 17 l. Suitable for businesses and households with very high mail volume.
- Plaster cover frame made from stainless steel angle profile 25 x 58 mm, 240-grit brushed finish.

Important information:

Post is only protected from moisture and dirt when fully inserted and the flap is closed. Under certain extreme weather conditions water can still enter (according to DIN EN 13724 up to 1 cm³). This does not constitute grounds for a complaint.

Product properties

Series	BASIC
Boxes by volume	Normal > 10 litres
Name labelling	Nameplate
Material	Stainless steel V2A 1.4301
House number	House number as laser engraving
Removal of mail	On the front
Number of boxes	with 5 letterboxes
Surface/colour	Brushed
Mounting type	Flush-mounted

Dimensions

Height of single box in mm	330.0
Width of single box in mm	355.0
Capacity in litres	12.0 | 17.0
Height of letterbox slot in mm	35.0
Width of letter slot in mm	325.0
Height of letterbox in mm	1040.0
Width of letterbox system in mm	760.0
Depth in mm	100.0 | 150.0
Weight in kg	32
Delivery condition	Delivered fully assembled

Briefkasten Manufaktur Lippe GmbH
Werler Straße 60
32105 Bad Salzuflen

www.briefkasten-manufaktur.de
info@briefkasten-manufaktur.de
Tel.: +49 5222 807110

Geschäftsführer Oliver Woineck
Ust.ID.Nr. DE303690847
Handelsregister Amtsgericht Lemgo, HRB 8618

More images









Briefkasten Manufaktur Lippe GmbH
Werler Straße 60
32105 Bad Salzuflen

www.briefkasten-manufaktur.de
info@briefkasten-manufaktur.de
Tel.: +49 5222 807110

Geschäftsführer Oliver Woineck
Ust.ID.Nr. DE303690847
Handelsregister Amtsgericht Lemgo, HRB 8618

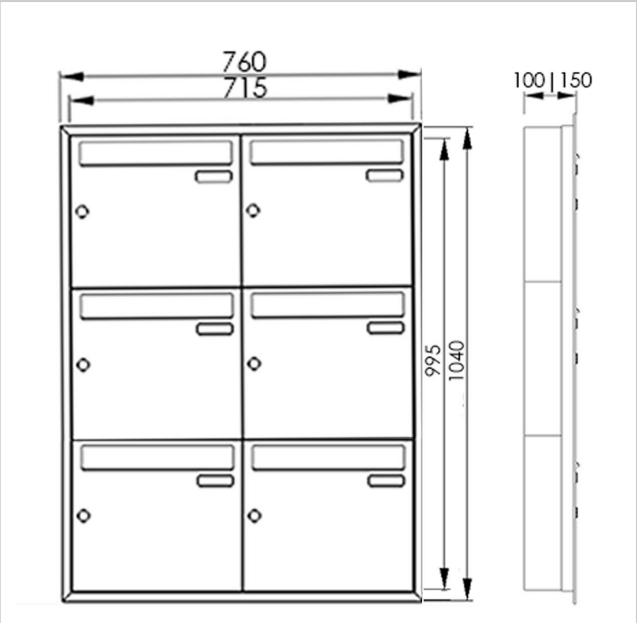



Briefkasten Manufaktur Lippe GmbH
Werler Straße 60
32105 Bad Salzuflen

www.briefkasten-manufaktur.de
info@briefkasten-manufaktur.de
Tel.: +49 5222 807110

Geschäftsführer Oliver Woineck
Ust.ID.Nr. DE303690847
Handelsregister Amtsgericht Lemgo, HRB 8618