2-post letterbox KANT Edition with newspaper compartment - Elegance 1 design - RAL 7016 anthracite grey | RAL 7016 Anthracite grey, fine texture, matt | with 2 letterboxes (1x2)

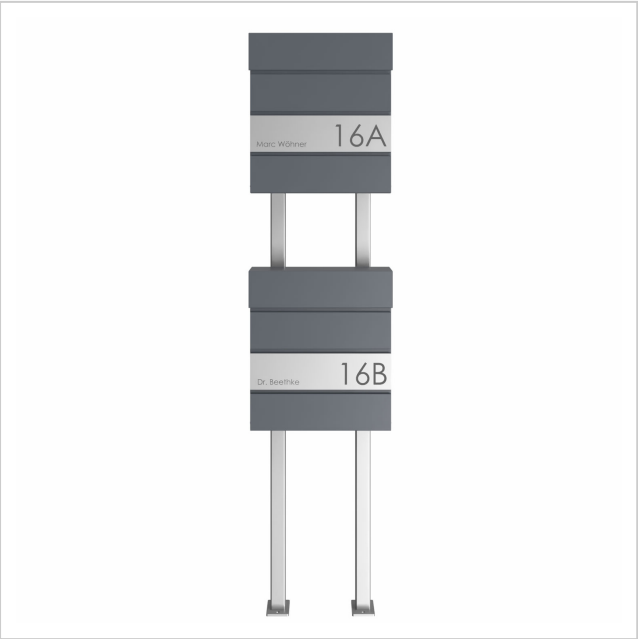

Product number 303-7016VA-STQ-2

Product description

2-post letterbox KANT Edition with newspaper compartment - Design Elegance 1 - RAL 7016 anthracite grey

The 2-post letterbox KANT Edition combines **elegant design** and functional convenience in one product. Its minimalist design with invisible lock and stylish labelling option fits seamlessly into modern living environments. You can rely on **long-lasting quality** thanks to our excellent choice of materials and precise workmanship.

The generous capacity of around 12 litres and top-loading ensures crease-free mail - even with DIN C4 envelopes and magazines. For added convenience, the letterbox is equipped with **high-quality axle dampers** that allow the flap to close gently and quietly. The newspaper compartment of this letter box offers maximum functionality with double-sided posting, ideal for modern everyday life. The scope of delivery includes a cover that can be retrofitted, giving you the option of reliably closing the weather side.

Thanks to the design, self-assembly is uncomplicated.

Briefkasten Manufaktur Lippe GmbH
Werler Straße 60
32105 Bad Salzuflen

www.briefkasten-manufaktur.de
info@briefkasten-manufaktur.de
Tel.: +49 5222 807110

Geschäftsführer Oliver Woineck
Ust.ID.Nr. DE303690847
Handelsregister Amtsgericht Lemgo, HRB 8618

- High-quality 2-post letterbox with letterboxes made of galvanised steel, powder-coated in RAL 7016 anthracite grey fine structure matt.
- Elegance 1 design: stainless steel trim, 240 grit polished.
- The doors open from top to bottom.
- Insertion from above, insertion flaps with high-quality axle dampers for silent closing.
- Includes 2 keys with key number per party.
- The letterboxes comply with DIN/EN 13724. Insertion size (3.5 cm x 33.5 cm) for C4 landscape, large letters also fit in here without creasing.
- Newspaper compartments (BH 360x110mm) made of galvanised steel, powder-coated in RAL 7016 anthracite grey fine structure matt. Open on both sides (1x cover included).
- Optional name lettering approx. 8-25mm high.
- Optional house number lettering approx. 60-80mm high.
- The pedestals are made of 40 mm x 40 mm stainless steel V2A 1.4301, polished for setting in concrete or screw mounting.

Important information:

To achieve optimum water protection for your mail, the letterbox or letterbox system should be located under a canopy if possible.

The mail is only protected from water if it is completely placed in the box and the flap is closed. Mail that is not fully inserted allows moisture and dirt to enter the letterbox. This system is protected against the ingress of water in accordance with DIN EN 13724. Water ingress is not a reason for complaint.

Product properties

Material	Steel, galvanised
Series	KANT
Functions	Newspaper compartment
Boxes by volume	Normal > 10 litres
Mounting type	Free-standing
House number	House number as laser engraving
Surface/colour	RAL 7016 anthracite grey
Number of boxes	with 2 letterboxes
Name labelling	Laser-engraved
Removal of mail	On the front

Briefkasten Manufaktur Lippe GmbH
Werler Straße 60
32105 Bad Salzuflen

www.briefkasten-manufaktur.de
info@briefkasten-manufaktur.de
Tel.: +49 5222 807110

Geschäftsführer Oliver Woineck
Ust.ID.Nr. DE303690847
Handelsregister Amtsgericht Lemgo, HRB 8618

Dimensions

Height of single box in mm	BK 280.0 | ZF 110.0
Width of single box in mm	355,0
Capacity in litres	12
Height of letterbox slot in mm	35,0
Width of letter slot in mm	335,0
Height of letterbox in mm	412,0
Width of letterbox system in mm	372,0
Overall height in mm	1500,0
Total width in mm	372,0
Depth in mm	110.0 + 21.0 fascia + 40.0 stand elements
Weight in kg	19
Delivery condition	Supplied in blocks, stand elements / letterbox divided

Dimension drawing

Briefkasten Manufaktur Lippe GmbH
Werler Straße 60
32105 Bad Salzuflen

www.briefkasten-manufaktur.de
info@briefkasten-manufaktur.de
Tel.: +49 5222 807110

Geschäftsführer Oliver Woineck
Ust.ID.Nr. DE303690847
Handelsregister Amtsgericht Lemgo, HRB 8618

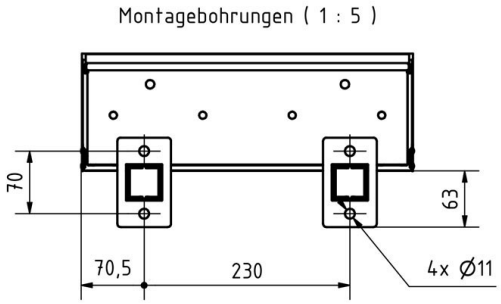

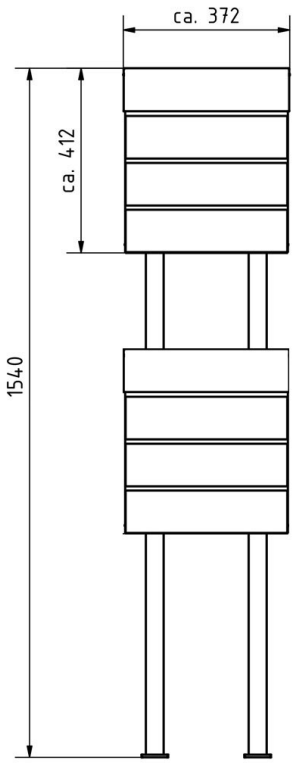

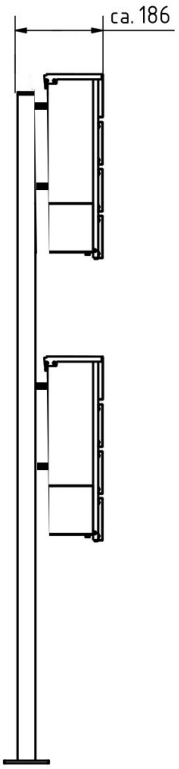

Briefkasten Manufaktur Lippe GmbH
Werler Straße 60
32105 Bad Salzuflen

www.briefkasten-manufaktur.de
info@briefkasten-manufaktur.de
Tel.: +49 5222 807110

Geschäftsführer Oliver Woineck
Ust.ID.Nr. DE303690847
Handelsregister Amtsgericht Lemgo, HRB 8618

More images









Briefkasten Manufaktur Lippe GmbH
Werler Straße 60
32105 Bad Salzuflen

www.briefkasten-manufaktur.de
info@briefkasten-manufaktur.de
Tel.: +49 5222 807110

Geschäftsführer Oliver Woineck
Ust.ID.Nr. DE303690847
Handelsregister Amtsgericht Lemgo, HRB 8618



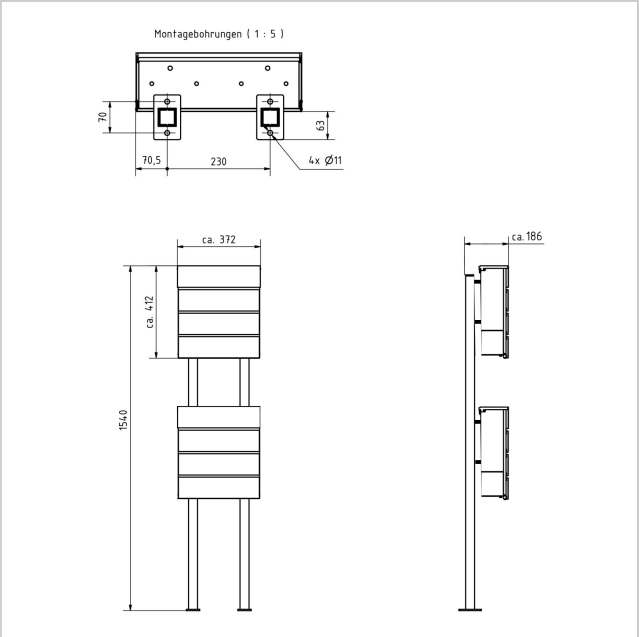

Briefkasten Manufaktur Lippe GmbH
Werler Straße 60
32105 Bad Salzuflen

www.briefkasten-manufaktur.de
info@briefkasten-manufaktur.de
Tel.: +49 5222 807110

Geschäftsführer Oliver Woineck
Ust.ID.Nr. DE303690847
Handelsregister Amtsgericht Lemgo, HRB 8618