Mailbox KANT Edition with newspaper compartment - Design Elegance 6 - RAL 9007 grey aluminium | RAL 9007 grey aluminium, fine-structure matt



Product number 303-E6-9007VA-AP

Product description

Letterbox KANT Edition with Newspaper Compartment - Design Elegance 6 - RAL 9007 grey aluminium

The KANT Edition letterbox combines **elegant design** with functional convenience in a single product. Its minimalist design with a concealed lock and stylish labelling option fits seamlessly into modern residential environments. Rely on **durable quality** thanks to our excellent choice of materials and precise workmanship.

The generous capacity of approximately 12 litres and the top entry ensure crease-free mail – even for C4 envelopes and magazines. For added convenience, the letterbox is equipped with **high-quality axle dampers** that enable a smooth and quiet closing of the entry flap. The newspaper compartment of this letterbox offers maximum functionality with access on both sides, ideal for modern everyday use. A retrofittable closure lid is included in the delivery, allowing you to reliably seal the weather side if required.

Thanks to the construction method, self-assembly is straightforward.

Briefkasten Manufaktur Lippe GmbH
Werler Straße 60
32105 Bad Salzuflen

www.briefkasten-manufaktur.de
info@briefkasten-manufaktur.de
Tel.: +49 5222 807110

Geschäftsführer Oliver Woineck
Ust.ID.Nr. DE303690847
Handelsregister Amtsgericht Lemgo, HRB 8618

- High-quality surface-mounted letterbox made of galvanised steel, powder-coated in RAL 9007 grey aluminium fine-textured matt.
- Design Elegance 6: stainless-steel faceplate and narrow stainless-steel strip, brushed with 240-grit finish.
- The door opens from top to bottom.
- Top entry; entry flap with high-quality axle dampers for silent closing.
- Includes 2 keys with key number.
- The letterbox complies with DIN/EN 13724. Entry size (3.5 cm x 33.5 cm) for C4 horizontally; large letters fit without bending.
- Newspaper compartment (BH 360x110mm) made of galvanised steel, powder-coated in RAL 9007 grey aluminium fine-textured matt. Open on both sides (1x closure lid included).
- Custom UV- and weather-resistant laser engraving.
- For surface-mounted wall installation; mounting screws included.

Important information:

To achieve optimal protection of your post from water, the letterbox or letterbox system should, where possible, be positioned under a canopy.

Postal items are only protected from water if they are placed entirely inside the box and the entry flap is closed. Post that is not fully inserted allows moisture and dirt to enter the letterbox. This unit is protected against water ingress in accordance with DIN EN 13724. Water ingress is not a valid basis for a complaint.

Product properties

Material	Steel, galvanised, Stainless steel V2A 1.4301
Surface/colour	RAL 9005 deep black, Brushed
Series	KANT
Functions	Newspaper compartment
Boxes by volume	Normal > 10 litres
House number	House number as laser engraving
Name labelling	Laser-engraved
Removal of mail	On the front
Number of boxes	with 1 letterbox
Mounting type	Surface-mounted

Briefkasten Manufaktur Lippe GmbH
Werler Straße 60
32105 Bad Salzuflen

www.briefkasten-manufaktur.de
info@briefkasten-manufaktur.de
Tel.: +49 5222 807110

Geschäftsführer Oliver Woineck
Ust.ID.Nr. DE303690847
Handelsregister Amtsgericht Lemgo, HRB 8618

Dimensions

Height of single box in mm	BK 280.0 | ZF 110.0
Width of single box in mm	355.0
Capacity in litres	12
Height of letterbox slot in mm	35.0
Width of letter slot in mm	335.0
Height of letterbox in mm	412.0
Width of letterbox system in mm	372.0
Total width in mm	372.0
Depth in mm	110.0 + 21.0 cover plate
Weight in kg	6
Delivery condition	Delivered fully assembled.

Dimension drawing

Briefkasten Manufaktur Lippe GmbH
Werler Straße 60
32105 Bad Salzuflen

www.briefkasten-manufaktur.de
info@briefkasten-manufaktur.de
Tel.: +49 5222 807110

Geschäftsführer Oliver Woineck
Ust.ID.Nr. DE303690847
Handelsregister Amtsgericht Lemgo, HRB 8618

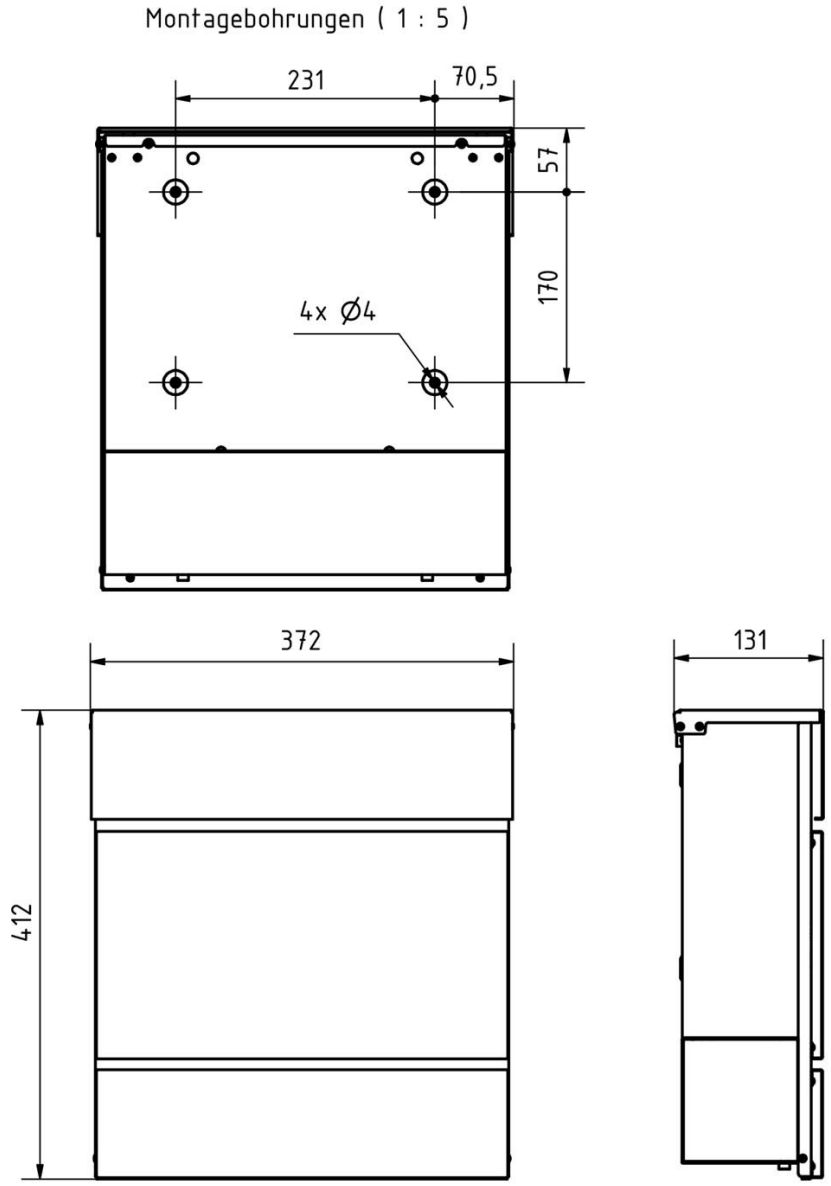

Briefkasten Manufaktur Lippe GmbH
Werler Straße 60
32105 Bad Salzuflen

www.briefkasten-manufaktur.de
info@briefkasten-manufaktur.de
Tel.: +49 5222 807110

Geschäftsführer Oliver Woineck
Ust.ID.Nr. DE303690847
Handelsregister Amtsgericht Lemgo, HRB 8618

More images





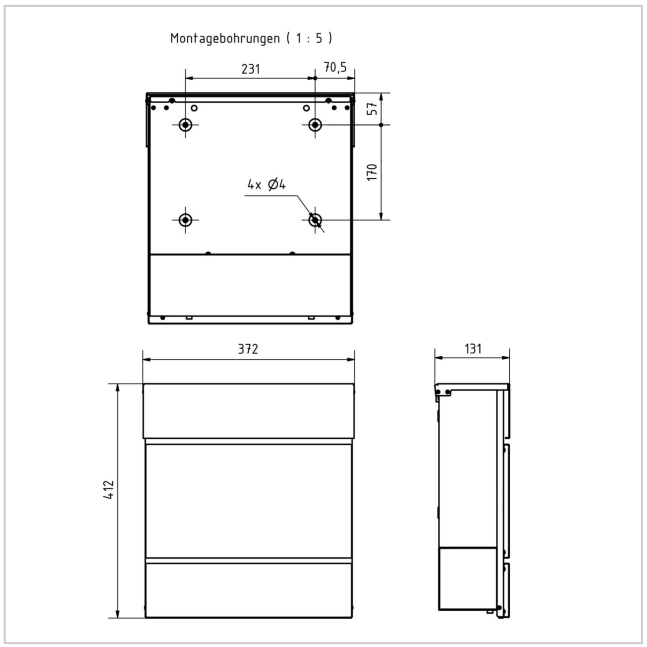



Briefkasten Manufaktur Lippe GmbH
Werler Straße 60
32105 Bad Salzuflen

www.briefkasten-manufaktur.de
info@briefkasten-manufaktur.de
Tel.: +49 5222 807110

Geschäftsführer Oliver Woineck
Ust.ID.Nr. DE303690847
Handelsregister Amtsgericht Lemgo, HRB 8618





Briefkasten Manufaktur Lippe GmbH
Werler Straße 60
32105 Bad Salzuflen

www.briefkasten-manufaktur.de
info@briefkasten-manufaktur.de
Tel.: +49 5222 807110

Geschäftsführer Oliver Woineck
Ust.ID.Nr. DE303690847
Handelsregister Amtsgericht Lemgo, HRB 8618