3-compartment freestanding letterbox Design BASIC 385 ST-R with doorbell box - Stainless steel RAL 7016 anthracite grey | BI-Color brushed stainless steel | RAL 7016 anthracite grey | Top | with 3 mailboxes



Product number 385-7016VA-3-SP

Product description

Freestanding 3-unit mailbox system BASIC 385 for 3 residential units with doorbell/intercom unit – BI-Color stainless steel / RAL 7016

The freestanding BASIC 385 mailbox system for 3 residential units combines a robust construction with a clear, functional design. It is suitable for multi-family houses, smaller residential developments as well as office and medical practice buildings and can be positioned independently of the building façade at the property entrance, at a driveway or along the access path.

The system configuration is matched to the number of residential units and, together with a rain canopy and side cladding, forms a closed unit.

The mailbox bodies are made of galvanised steel in RAL 7016 anthracite grey fine-textured matt. Brushed stainless steel V2A insertion flaps create a high-quality BI-Color accent. A close-fitting side cladding with rain canopy unites the individual mailboxes into a single closed installation.

Each letterbox has an insertion opening of 35 × 265 mm suitable for DIN C4 items in portrait orientation. A sound-dampening rubber lip reduces impact noise, while the front access doors open from left to right. Each mailbox is supplied with two keys with key number and a changeable name plate located beneath the insertion flap.

The integrated doorbell/intercom unit combines doorbell functionality and preparation for an intercom system directly within the mailbox system.

The advantages of the BASIC 385 at a glance

Solid stainless steel support posts

Briefkasten Manufaktur Lippe GmbH
Werler Straße 60
32105 Bad Salzuflen

www.briefkasten-manufaktur.de
info@briefkasten-manufaktur.de
Tel.: +49 5222 807110

Geschäftsführer Oliver Woineck
Ust.ID.Nr. DE303690847
Handelsregister Amtsgericht Lemgo, HRB 8618

Round-tube support posts of approx. 60 mm diameter in brushed stainless steel V2A 1.4301 provide a stable base for the freestanding mailbox system. The robust construction is designed for long-term use at the property entrance.

Clear assignment for all residential units

The system provides 3 separately usable mail compartments and can be installed independently of a building wall at an easily accessible location on the property.

Large insertion opening to DIN EN 13724

The insertion opening of 35 × 265 mm is designed for DIN C4 items in portrait orientation. Larger envelopes can also be inserted without being folded.

Quiet insertion and comfortable retrieval

A sound-dampening rubber lip reduces the impact of the insertion flaps. Mail is retrieved from the front via doors that open from left to right.

Doorbell/intercom unit integrated directly

The doorbell/intercom panel is integrated directly into the mailbox system.

Equipment of the BASIC 385 mailbox system

Mailbox system

Design Article-specific system configuration
Number of mailboxes 3 separately usable compartments
Mailbox material Galvanised steel with stainless steel insertion flaps
Finish BI-Color: RAL 7016 anthracite grey fine-textured matt / brushed stainless steel V2A
Rain canopy / side cladding Galvanised steel, powder-coated in RAL 7016 anthracite grey fine-textured matt
Manufacture Made in Germany by Briefkasten Manufaktur Lippe

Mail and operation

Insertion opening 35 × 265 mm, suitable for DIN C4 portrait
Insertion flaps With sound-dampening rubber lip
Mail retrieval From the front
Door opening Opens from left to right
Keys 2 keys with key number per mailbox
Name plate Changeable name plate beneath the insertion flap
Standard Mailboxes conforming to DIN EN 13724

Support posts and fittings

Support posts Round tube approx. 60 mm made of brushed stainless steel V2A 1.4301
Mounting options Selectable for bolted mounting or for setting in concrete
Fastening Anchor bolts for bolted mounting are not included; select appropriate fixings for the foundation separately
Doorbell/intercom unit Integrated functional panel
Intercom preparation Speaker aperture with universal adapter for commonly available flush-mounted speakers
Doorbell push button Round stainless steel doorbell push buttons matching the product design

Briefkasten Manufaktur Lippe GmbH
Werler Straße 60
32105 Bad Salzuflen

www.briefkasten-manufaktur.de
info@briefkasten-manufaktur.de
Tel.: +49 5222 807110

Geschäftsführer Oliver Woineck
Ust.ID.Nr. DE303690847
Handelsregister Amtsgericht Lemgo, HRB 8618

Mailbox size and volume

The BASIC 385 is available with different mailbox sizes depending on the product configuration. The standard version 300 × 110 × 385 mm offers approx. 12 litres volume; depending on the variant, 300 × 220 × 385 mm with approx. 25 litres volume is also available.

Mounting by setting in concrete

For the freestanding system we recommend a suitably dimensioned concrete foundation. When setting in concrete, the stainless steel support posts must be aligned plumb and permanently anchored in the foundation. Foundation size and embedment depth should be matched to ground conditions, system weight and local requirements.

Bolted mounting on a foundation

For bolted mounting a level, load-bearing concrete foundation is required. Suitable anchor bolts or fixings should be selected to suit the substrate and the load on the system. For the BASIC-385-ST-R versions, anchor bolts are not included in the standard scope of delivery.

Note on weather protection

Mail items are best protected against moisture and soiling only when fully inserted and with the insertion flap closed. Protruding items can prevent the flap from closing completely. Under extreme weather conditions, moisture can enter the mailbox despite compliant design.

Note regarding doorbell and intercom technology

The doorbell/intercom unit is prepared with a speaker aperture and universal adapter for common flush-mounted speakers. Intercom systems or built-in speakers are not included in the standard equipment. Planning, connection and commissioning of electrical components should be carried out by a qualified electrician.

Product properties

Material	Steel, galvanised, Stainless steel V2A 1.4301
Series	BASIC
Number of bell push buttons	3 buttons
Functions	Light button, Intercom
Functional box prepared for manufacturer	GIRA, Busch Jaeger, Siedle, STR Elektronik, ELCOM, TCS, Ritto, ALGO, Telegärtner, Auerswald, Legrand Bticino, Comelit
Boxes by volume	Normal > 10 litres
Name labelling	Nameplate
Mounting type	Free-standing
Surface/colour	RAL 7016 anthracite grey, Brushed
Removal of mail	On the front
Number of boxes	with 3 letterboxes

Briefkasten Manufaktur Lippe GmbH
Werler Straße 60
32105 Bad Salzuflen

www.briefkasten-manufaktur.de
info@briefkasten-manufaktur.de
Tel.: +49 5222 807110

Geschäftsführer Oliver Woineck
Ust.ID.Nr. DE303690847
Handelsregister Amtsgericht Lemgo, HRB 8618

Dimensions

Height of single box in mm	110.0
Width of single box in mm	300.0
Capacity in litres	12
Height of letterbox slot in mm	35.0
Width of letter slot in mm	265.0
Height of letterbox in mm	440.0
Width of letterbox system in mm	300.0
Overall height in mm	1200.0 | 1500.0 | 1700.0
Total width in mm	465.0
Depth in mm	435.0
Weight in kg	26
Delivery condition	Delivery is made in blocks; stand elements / mailbox are delivered separately.

Dimension drawing

Briefkasten Manufaktur Lippe GmbH
Werler Straße 60
32105 Bad Salzuflen

www.briefkasten-manufaktur.de
info@briefkasten-manufaktur.de
Tel.: +49 5222 807110

Geschäftsführer Oliver Woineck
Ust.ID.Nr. DE303690847
Handelsregister Amtsgericht Lemgo, HRB 8618

Montagebohrungen

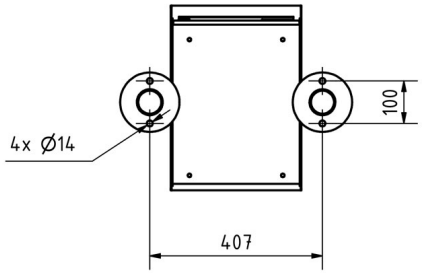

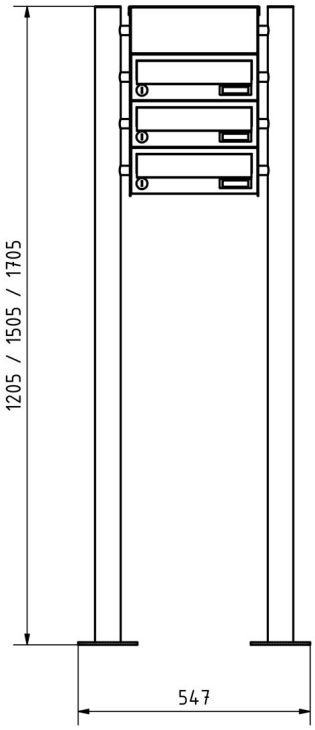

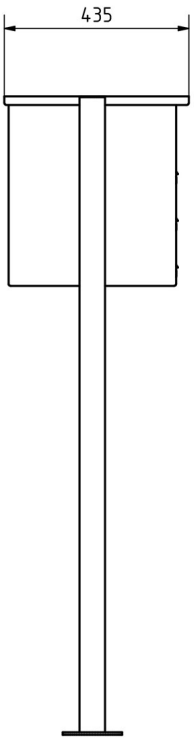

Briefkasten Manufaktur Lippe GmbH
Werler Straße 60
32105 Bad Salzuflen

www.briefkasten-manufaktur.de
info@briefkasten-manufaktur.de
Tel.: +49 5222 807110

Geschäftsführer Oliver Woineck
Ust.ID.Nr. DE303690847
Handelsregister Amtsgericht Lemgo, HRB 8618

More images









Briefkasten Manufaktur Lippe GmbH
Werler Straße 60
32105 Bad Salzuflen

www.briefkasten-manufaktur.de
info@briefkasten-manufaktur.de
Tel.: +49 5222 807110

Geschäftsführer Oliver Woineck
Ust.ID.Nr. DE303690847
Handelsregister Amtsgericht Lemgo, HRB 8618



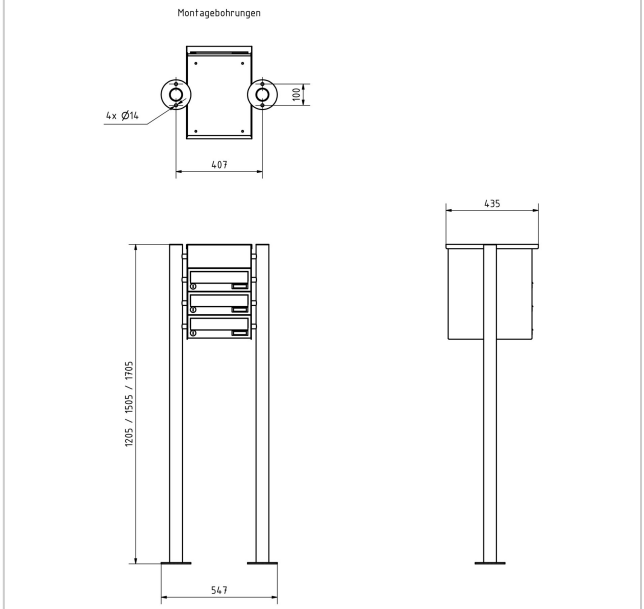





Briefkasten Manufaktur Lippe GmbH
Werler Straße 60
32105 Bad Salzuflen

www.briefkasten-manufaktur.de
info@briefkasten-manufaktur.de
Tel.: +49 5222 807110

Geschäftsführer Oliver Woineck
Ust.ID.Nr. DE303690847
Handelsregister Amtsgericht Lemgo, HRB 8618



Briefkasten Manufaktur Lippe GmbH
Werler Straße 60
32105 Bad Salzuflen

www.briefkasten-manufaktur.de
info@briefkasten-manufaktur.de
Tel.: +49 5222 807110

Geschäftsführer Oliver Woineck
Ust.ID.Nr. DE303690847
Handelsregister Amtsgericht Lemgo, HRB 8618