15-compartment BASIC letterbox bank – Flush-mounted – Choice of RAL colour

Product number BML3D-XVBPRGUFXE

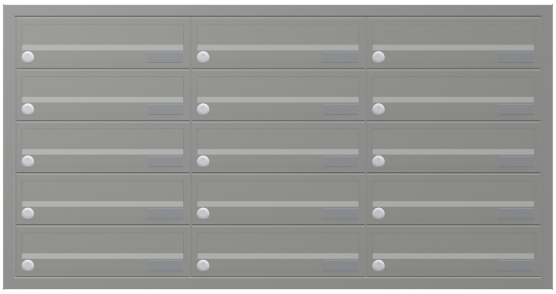

Product description

Welcoming design and convenient everyday mail delivery

The BASIC Horizontal letterbox bank from Briefkasten Manufaktur welcomes you and your visitors with a clean, uncluttered design. Its modular construction brings your chosen functions together in a clearly organised, customisable solution for everyday use. The BASIC series offers letterboxes, accessory boxes and functional modules that can be combined in a variety of ways for a coordinated entrance area. This bank is designed for flush mounting and provides 15 letterboxes for daily mail.

The letterbox bank is finished in your choice of RAL colour and has overall dimensions of W 1162 × H 605 × D 394 mm.

Select “Configure now” to open this exact configuration in the 3D configurator. You can then customise the letterbox bank further and place your order.

Individually configurable

Create a letterbox bank to suit your home: select “Configure now” to adapt this configuration to your requirements.

- Box finish: customise the colour in the 3D configurator using the colours available for this version.
- Personalised lettering: add your own names, house numbers or chosen text to the designated areas. Any lettering shown is an example and can be replaced.
- Lettering style: choose from the fonts available for lettering and adjust the appearance in the configurator.
- Features: add or change compatible components from the selection available for this letterbox bank.

When you make individual changes, the dimensions and price are recalculated in the 3D configurator to reflect your selection.

Plaster trim frame

Briefkasten Manufaktur Lippe GmbH
Werler Straße 60
32105 Bad Salzuflen

www.briefkasten-manufaktur.de
info@briefkasten-manufaktur.de
Tel.: +49 5222 807110

Geschäftsführer Oliver Woineck
Ust.ID.Nr. DE303690847
Handelsregister Amtsgericht Lemgo, HRB 8618

The flush-mounted letterbox bank is fitted with a plaster trim frame made from 1,5 mm thick V2A stainless steel. The frame covers the transition between the installation opening and the wall surface, providing a neat finish.

Materials and workmanship

Base material: V2A 1.4301 stainless steel. V2A stainless steel provides a corrosion-resistant, durable foundation for the entrance area.

The powder-coated surface is finished in your choice of RAL colour. Select your preferred colour in the 3D configurator.

Letterbox and ease of use

Letterbox 370 × 110 × 385 mm: includes a rainwater drainage edge for optimum protection against water, a continuous rubber lip for quiet mail delivery, a sturdy replaceable nameplate and a highly robust lock. The mail slot height and a narrowing of the chute help protect mail against unauthorised removal.

Features

BASIC Type 2 plastic nameplate: made from crystal-clear polycarbonate. The insert can be replaced from the front.

Features of this letterbox bank

- Product range: BASIC Horizontal
- Installation: flush mounting
- Finish: choice of RAL colour
- Overall dimensions: W 1162 × H 605 × D 394 mm
- 15 letterboxes
- Box finish: choice of RAL colour
- Base material: V2A 1.4301 stainless steel. Finish: powder coating or brushed stainless steel

Important information:

Protection against water: a sheltered location, ideally under a canopy, helps protect your mail. Mail should be inserted fully and the mail flap should be closed.

Installation: check the mounting surface and installation conditions against the overall dimensions and installation instructions.

Product properties

Series	BASIC
Name labelling	Nameplate
Material	Stainless steel V2A 1.4301
Number of boxes	with 15 letterboxes
Removal of mail	On the front
Surface/colour	RAL of your choice (according to colour table)
Mounting type	Flush-mounted

Briefkasten Manufaktur Lippe GmbH
Werler Straße 60
32105 Bad Salzuflen

www.briefkasten-manufaktur.de
info@briefkasten-manufaktur.de
Tel.: +49 5222 807110

Geschäftsführer Oliver Woineck
Ust.ID.Nr. DE303690847
Handelsregister Amtsgericht Lemgo, HRB 8618

Dimensions

Height of single box in mm	110
Width of single box in mm	370
Overall height in mm	605
Total width in mm	1162
Depth in mm	394

Dimension drawing

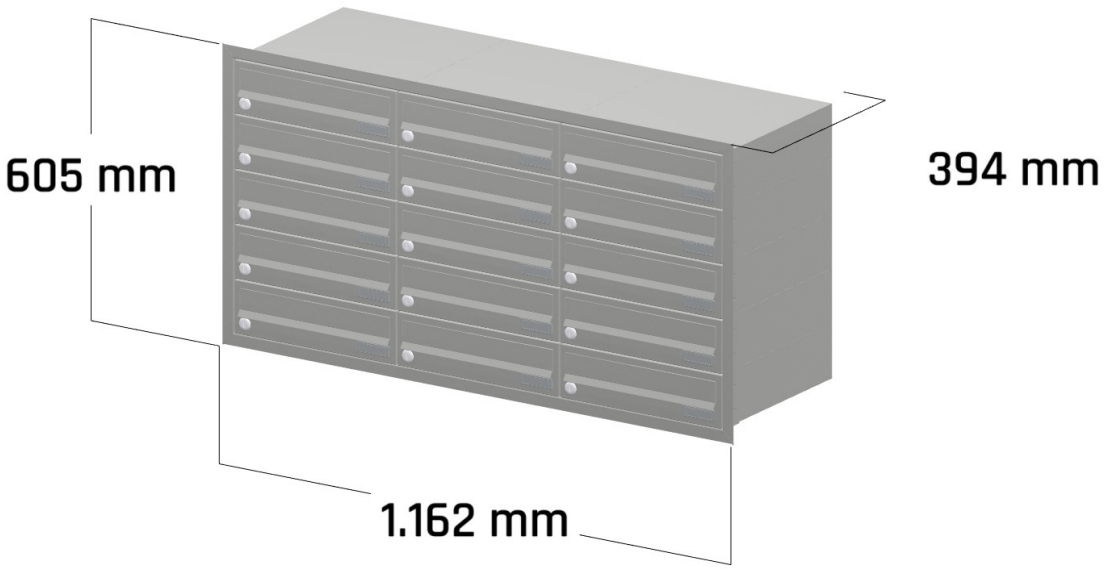

Briefkasten Manufaktur Lippe GmbH
Werler Straße 60
32105 Bad Salzuflen

www.briefkasten-manufaktur.de
info@briefkasten-manufaktur.de
Tel.: +49 5222 807110

Geschäftsführer Oliver Woineck
Ust.ID.Nr. DE303690847
Handelsregister Amtsgericht Lemgo, HRB 8618

More images



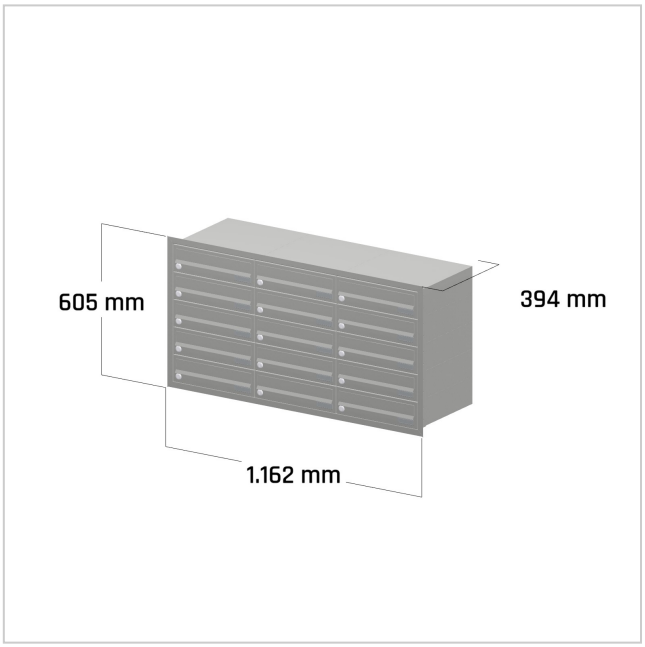

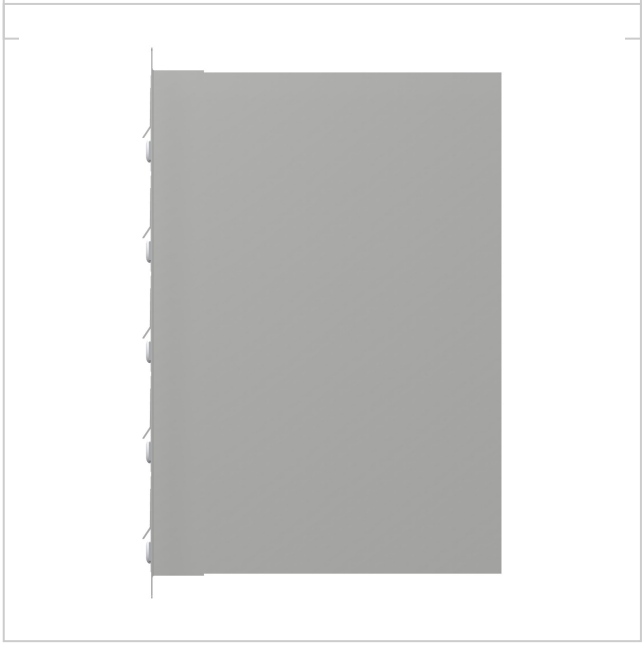

Briefkasten Manufaktur Lippe GmbH
Werler Straße 60
32105 Bad Salzuflen

www.briefkasten-manufaktur.de
info@briefkasten-manufaktur.de
Tel.: +49 5222 807110

Geschäftsführer Oliver Woineck
Ust.ID.Nr. DE303690847
Handelsregister Amtsgericht Lemgo, HRB 8618