3-unit GOETHE letterbox system with 3 milk compartments for newspapers and storage – surface-mounted – choice of RAL colour

Product number BML3D-S5M15U9CGY



Product description

GOETHE in your preferred RAL colour: wall-mounted letterbox system with three milk compartments, built to the Swiss PTT postal standard

This letterbox system from the GOETHE range combines three letterboxes with three separate milk compartments designed for newspapers and storage. The system is surface-mounted and features close-fitting cladding and a flat rain canopy.

The powder-coated version in your choice of RAL colour combines stainless steel boxes with aluminium cladding. Mail is retrieved from the front of the letterboxes.

Features of this letterbox system

- Overall external dimensions: 1212 × 408 × 425 mm (W × H × D).
- 3 letterboxes and 3 separate milk compartments for newspapers and storage; external dimensions of each box: 400 × 200 × 400 mm (W × H × D). These are not the usable internal dimensions.
- Surface-mounted on the wall; 2 mounting rails, each 1080 mm long, are included.
- Body made from 1.4016 stainless steel, front panels from V2A 1.4301 stainless steel.
- Close-fitting cladding made from 3 mm AlMg3 W19 aluminium, with 2 side panels and a flat rain canopy.
- Powder-coated finish in your choice of RAL colour.

Special features of this letterbox system

Letterboxes built to the Swiss PTT postal standard with Push-Key locks

The letterboxes comply with the Swiss PTT postal standard. Each of the three letterboxes is fitted with a Push-Key lock. The locks are keyed to differ.

Briefkasten Manufaktur Lippe GmbH
Werler Straße 60
32105 Bad Salzuflen

www.briefkasten-manufaktur.de
info@briefkasten-manufaktur.de
Tel.: +49 5222 807110

Geschäftsführer Oliver Woineck
Ust.ID.Nr. DE303690847
Handelsregister Amtsgericht Lemgo, HRB 8618

Features include a damped letter flap, a continuous rubber lip and a rainwater run-off edge. The letter slot is designed for DIN-C4 envelopes. The design of the front retrieval door helps prevent mail from falling out when it is opened.

Three separate milk compartments for newspapers and storage

The three additional stainless steel compartments serve as milk compartments or as newspaper and storage compartments. They open upwards from the bottom.

No lock has been selected for these compartments. They are not secure parcel boxes.

Six nameplates with inserts replaceable from the front

Each letterbox has two BASIC Type 2 nameplates made from crystal-clear polycarbonate. You can replace the inserts from the front.

The selected specification includes a “No junk mail, thank you” insert to indicate that you do not wish to receive unsolicited advertising.

Individually configurable

Design your letterbox system to suit your home: select “Configure now” to customise this configuration to your requirements.

- Box finish: customise the colour in the 3D configurator using the colours available for this version.
- Personalised lettering: add your own names, house numbers or preferred text to the designated areas. Any lettering shown is an example and can be replaced.
- Font styling: choose from the fonts available for lettering and adjust the appearance in the configurator.
- Specification: add or change compatible components from the selection currently available for this system.

When you make individual changes, the dimensions and price are recalculated in the 3D configurator to reflect your selection.

Important information

Protection from water: a sheltered location, ideally beneath a canopy, helps protect your mail. Mail should be fully inserted and the letter flap closed.

Installation: check the mounting surface and installation conditions against the overall dimensions and installation instructions.

Briefkasten Manufaktur Lippe GmbH
Werler Straße 60
32105 Bad Salzuflen

www.briefkasten-manufaktur.de
info@briefkasten-manufaktur.de
Tel.: +49 5222 807110

Geschäftsführer Oliver Woineck
Ust.ID.Nr. DE303690847
Handelsregister Amtsgericht Lemgo, HRB 8618

Product properties

Series	GOETHE
Access control	Push-Key
Name labelling	Nameplate
Material	Aluminium AlMg3 W19, Stainless steel V2A 1.4301, Stainless steel 1.4016 (non-rusting magnetic stainless steel)
Removal of mail	On the front
Surface/colour	RAL of your choice (according to colour table)
Mounting type	Surface-mounted
Number of boxes	with 3 letterboxes

Briefkasten Manufaktur Lippe GmbH
Werler Straße 60
32105 Bad Salzuflen

www.briefkasten-manufaktur.de
info@briefkasten-manufaktur.de
Tel.: +49 5222 807110

Geschäftsführer Oliver Woineck
Ust.ID.Nr. DE303690847
Handelsregister Amtsgericht Lemgo, HRB 8618

Dimensions

Height of single box in mm	200
Width of single box in mm	400
Overall height in mm	408
Total width in mm	1212
Depth in mm	425

Dimension drawing

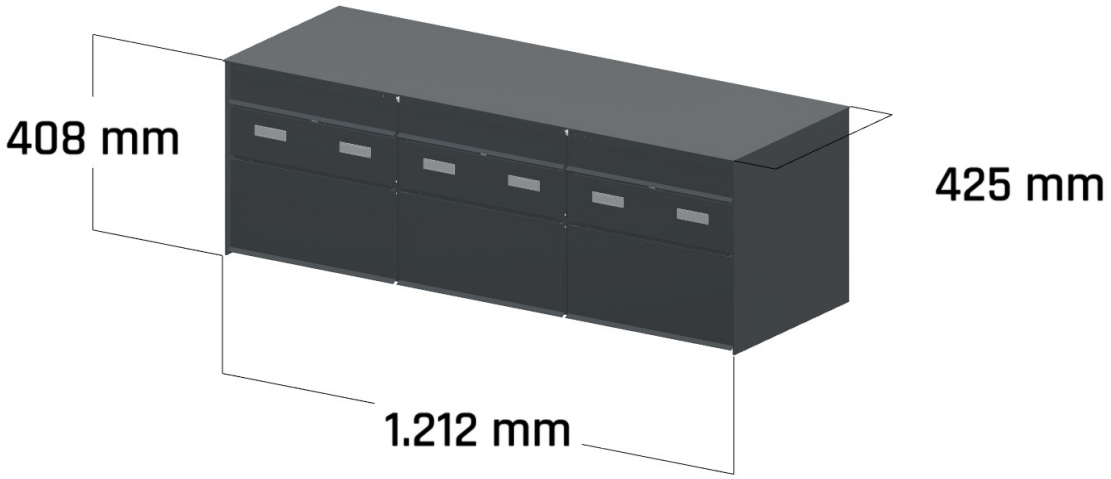

Briefkasten Manufaktur Lippe GmbH
Werler Straße 60
32105 Bad Salzuflen

www.briefkasten-manufaktur.de
info@briefkasten-manufaktur.de
Tel.: +49 5222 807110

Geschäftsführer Oliver Woineck
Ust.ID.Nr. DE303690847
Handelsregister Amtsgericht Lemgo, HRB 8618

More images



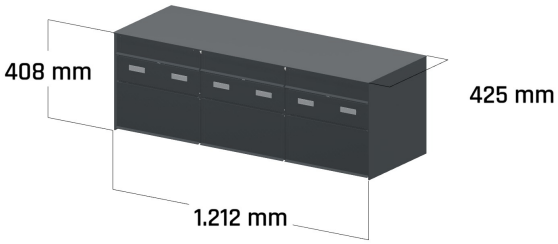

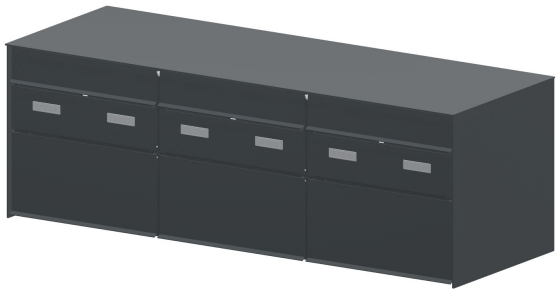



Briefkasten Manufaktur Lippe GmbH
Werler Straße 60
32105 Bad Salzuflen

www.briefkasten-manufaktur.de
info@briefkasten-manufaktur.de
Tel.: +49 5222 807110

Geschäftsführer Oliver Woineck
Ust.ID.Nr. DE303690847
Handelsregister Amtsgericht Lemgo, HRB 8618