3-piece surface-mounted letterbox system Design BASIC 385A-VA AP with bell box - stainless steel V2A, polished | Top | Stainless steel, brushed | with 3 mailboxes

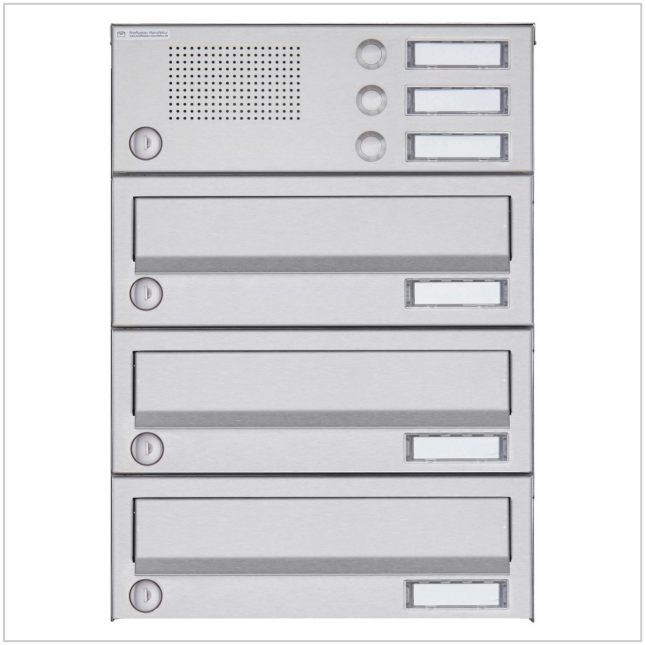

Product number 385A-VA-3S-SP

Product description

3-point surface-mounted letterbox system Design BASIC 385A-VA-SP made of stainless steel V2 A polished with bell box incl. side panelling & rain cover

Modern surface-mounted letterbox system for 3 parties made in Germany by Briefkasten Manufaktur.

The letterboxes are made of weather-resistant V2A stainless steel, polished. The high-quality workmanship and the well thought-out concept make this letterbox system our top seller. This letterbox system is characterised by a close-fitting side cladding with rain canopy and the rain drainage channels for optimum water protection, a throw-in flap with rubber lip, the solid interchangeable nameplate and the robust lock.

Thanks to the design, self-assembly is uncomplicated.

Briefkasten Manufaktur Lippe GmbH
Werler Straße 60
32105 Bad Salzuflen

www.briefkasten-manufaktur.de
info@briefkasten-manufaktur.de
Tel.: +49 5222 807110

Geschäftsführer Oliver Woineck
Ust.ID.Nr. DE303690847
Handelsregister Amtsgericht Lemgo, HRB 8618

- **3-post surface-mounted letterbox system made of stainless steel V2 A, polished**
- The system is manufactured by Briefkasten Manufaktur. German quality production "Made in Germany".
- The letterboxes comply with DIN/EN 13724. Insertion size (3.5 cm x 26.5 cm) for C4 landscape, large letters also fit in here without creasing.
- Insertion flaps with sound-absorbing rubber lip for very quiet mail insertion.
- The doors can be opened from left to right.
- Incl. 2 keys with key number and changeable name plate under the flap.
- Optionally available with close-fitting side panelling + rain cover made of V2A stainless steel, polished.
- **Bell box made of stainless steel V2 A, polished**
- Intercom hole with universal adapter. (Intercom system/ built-in loudspeaker not included in the scope of delivery).
- Universal adapter is suitable for all commercially available built-in loudspeakers (Siedle, Ritto, TCS, Busch-Jäger, Gira, Legrand Bticino, ELCOM, Auerswald, Comelit and many more).
- Round stainless steel bell push type 4, max. 250 V AC, 5 A.
- Anti-vandalism - The nameplate is indentation-proof and impact-resistant, the plastic is flame-retardant.
- For simple 1-2 person wall mounting with mounting rail incl. fixing material (screws + wall plugs).

Important information

Camera or intercom preparation

The intercom systems must be connected by an electrician. Please contact your trusted electrician for planning, fitting and installation.

Water protection

The mail is only protected against moisture and dirt when it is fully inserted and the flap is closed. Under certain extreme weather conditions, water may still enter (up to 1ccm according to DIN EN 13724). This is not a reason for complaint.

Product properties

Material	Steel, galvanised, Stainless steel V2A 1.4301
Series	BASIC
Number of bell push buttons	3 buttons
Functions	Light button, Intercom
Functional box prepared for manufacturer	GIRA, Busch Jaeger, Siedle, STR Elektronik, ELCOM, TCS, Ritto, ALGO, Telegärtner, Auerswald, Legrand Bticino, Comelit
Boxes by volume	Normal > 10 litres
Name labelling	Nameplate
Removal of mail	On the front
Surface/colour	Brushed
Mounting type	Surface-mounted
Number of boxes	with 3 letterboxes

Briefkasten Manufaktur Lippe GmbH
Werler Straße 60
32105 Bad Salzuflen

www.briefkasten-manufaktur.de
info@briefkasten-manufaktur.de
Tel.: +49 5222 807110

Geschäftsführer Oliver Woineck
Ust.ID.Nr. DE303690847
Handelsregister Amtsgericht Lemgo, HRB 8618

Dimensions

Height of single box in mm	110,0
Width of single box in mm	300,0
Capacity in litres	12
Height of letterbox slot in mm	35,0
Width of letter slot in mm	265,0
Height of letterbox in mm	440,0
Width of letterbox system in mm	300,0
Depth in mm	435,0
Weight in kg	25
Delivery condition	Supplied fully assembled

Dimension drawing

Briefkasten Manufaktur Lippe GmbH
Werler Straße 60
32105 Bad Salzuflen

www.briefkasten-manufaktur.de
info@briefkasten-manufaktur.de
Tel.: +49 5222 807110

Geschäftsführer Oliver Woineck
Ust.ID.Nr. DE303690847
Handelsregister Amtsgericht Lemgo, HRB 8618

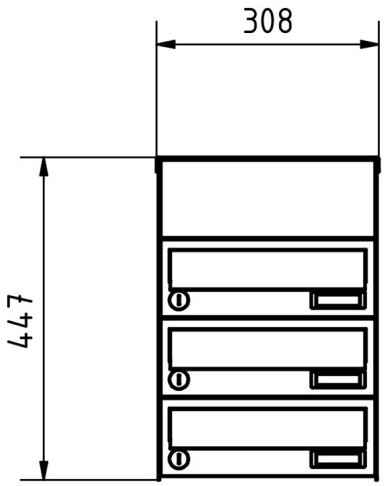

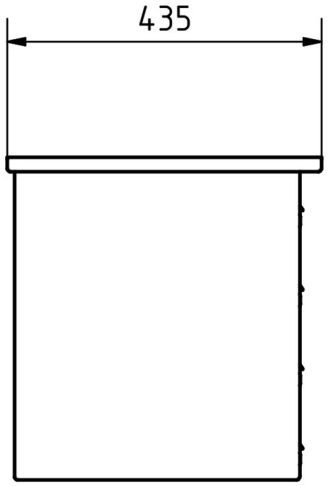

Briefkasten Manufaktur Lippe GmbH
Werler Straße 60
32105 Bad Salzuflen

www.briefkasten-manufaktur.de
info@briefkasten-manufaktur.de
Tel.: +49 5222 807110

Geschäftsführer Oliver Woineck
Ust.ID.Nr. DE303690847
Handelsregister Amtsgericht Lemgo, HRB 8618

More images







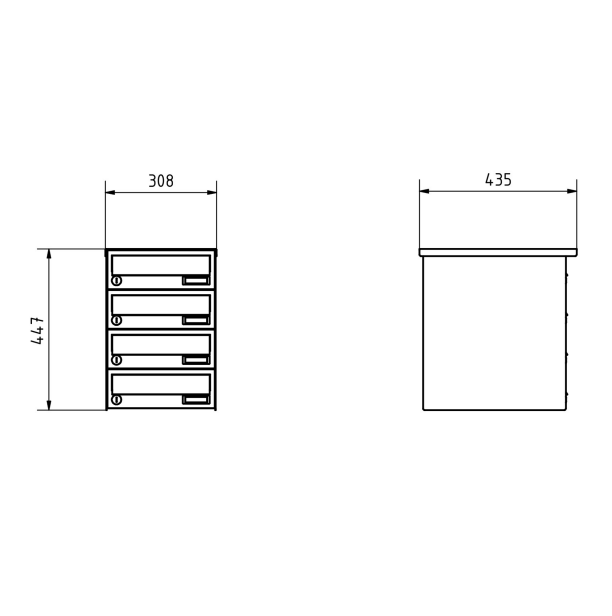

Briefkasten Manufaktur Lippe GmbH
Werler Straße 60
32105 Bad Salzuflen

www.briefkasten-manufaktur.de
info@briefkasten-manufaktur.de
Tel.: +49 5222 807110

Geschäftsführer Oliver Woineck
Ust.ID.Nr. DE303690847
Handelsregister Amtsgericht Lemgo, HRB 8618







Briefkasten Manufaktur Lippe GmbH
Werler Straße 60
32105 Bad Salzuflen

www.briefkasten-manufaktur.de
info@briefkasten-manufaktur.de
Tel.: +49 5222 807110

Geschäftsführer Oliver Woineck
Ust.ID.Nr. DE303690847
Handelsregister Amtsgericht Lemgo, HRB 8618