4er 2x2 stainless steel surface-mounted letterbox design BASIC Plus 382XA AP - RAL of your choice | 100mm depth | ? Colour of your choice | with 4 mailboxes (2x2)



Product number 382XA-4-100

Product description

4-unit 2x2 stainless steel surface-mounted mailbox Design BASIC Plus 382XA AP - RAL colour of your choice

High-quality surface-mounted mailbox for 4 occupants made in Germany by Briefkasten Manufaktur.

The complete surface-mounted mailbox system is made of stainless steel V2A, powder-coated in a RAL colour. The very high-quality workmanship and the well thought-out concept make this mailbox system one of our top sellers. A rain run-off edge for optimal water protection, a continuous rubber lip for quiet posting, a secure interchangeable nameplate, a practical mail retention bracket and a very robust lock characterise this surface-mounted mailbox system.

Thanks to the construction method, self-installation is straightforward. The mailbox system is prepared for uncomplicated complete installation; there is no need for complex wall mounting of individual boxes.

Briefkasten Manufaktur Lippe GmbH
Werler Straße 60
32105 Bad Salzuflen

www.briefkasten-manufaktur.de
info@briefkasten-manufaktur.de
Tel.: +49 5222 807110

Geschäftsführer Oliver Woineck
Ust.ID.Nr. DE303690847
Handelsregister Amtsgericht Lemgo, HRB 8618

- 4-unit surface-mounted mailbox system with mailboxes made of stainless steel V2A, powder-coated in a RAL colour.
- The system is manufactured by Briefkasten Manufaktur. German quality manufacturing – Made in Germany.
- The mailboxes comply with DIN/EN 13724. Insert size (3.5 cm x 32.5 cm) for C4 landscape; large letters can be inserted without folding.
- Insertion flaps with noise-dampening rubber seal for very quiet posting.
- The doors open from left to right.
- Includes 2 keys with key number, interchangeable nameplate under the insertion flap and mail retention bracket per mailbox.
- Large capacity through optional mailbox depth +50 mm = approx. 17 l. Suitable for businesses and households with a very high volume of mail.
- Includes side cladding and rain canopy made of stainless steel V2A, powder-coated in a RAL colour.
- For wall mounting; includes mounting rail and fastening materials (screws and wall plugs).

Important information:

Mail is only protected from moisture and dirt when fully inserted and the flap is closed. Under certain extreme weather conditions, water may still enter (according to DIN EN 13724 up to 1 cm^3). This does not constitute grounds for a complaint.

Product properties

Surface/colour	RAL 9005 deep black, RAL 3004 crimson red, DB 703 iron mica, RAL 7016 anthracite grey, RAL of your choice (according to colour table), RAL 9007 grey aluminium, RAL 9016 traffic white
Series	BASIC
Boxes by volume	Normal > 10 litres
Number of boxes	with 4 letterboxes
Name labelling	Nameplate
Material	Stainless steel V2A 1.4301
Removal of mail	On the front
Mounting type	Surface-mounted

Briefkasten Manufaktur Lippe GmbH
Werler Straße 60
32105 Bad Salzuflen

www.briefkasten-manufaktur.de
info@briefkasten-manufaktur.de
Tel.: +49 5222 807110

Geschäftsführer Oliver Woineck
Ust.ID.Nr. DE303690847
Handelsregister Amtsgericht Lemgo, HRB 8618

Dimensions

Height of single box in mm	330.0
Width of single box in mm	355.0
Capacity in litres	12.0 | 17.0
Height of letterbox slot in mm	35.0
Width of letter slot in mm	325.0
Height of letterbox in mm	660.0
Width of letterbox system in mm	710.0
Depth in mm	100.0 | 150.0
Weight in kg	24
Delivery condition	The system is delivered pre-assembled/partially disassembled.

Briefkasten Manufaktur Lippe GmbH
Werler Straße 60
32105 Bad Salzuflen

www.briefkasten-manufaktur.de
info@briefkasten-manufaktur.de
Tel.: +49 5222 807110

Geschäftsführer Oliver Woineck
Ust.ID.Nr. DE303690847
Handelsregister Amtsgericht Lemgo, HRB 8618

More images





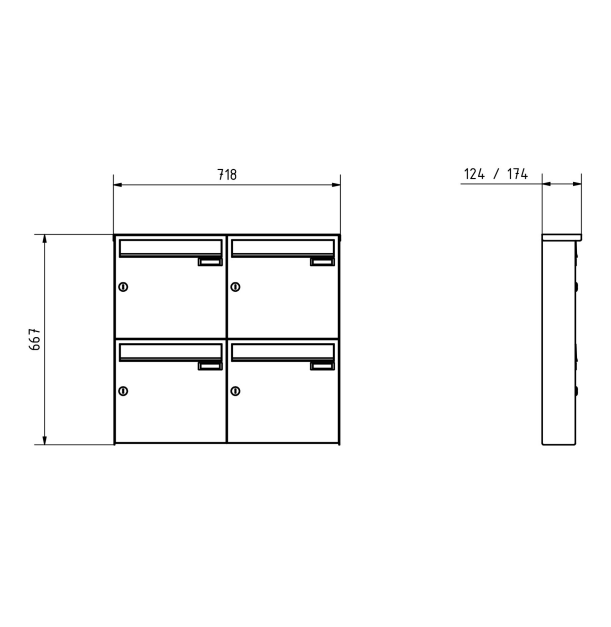



Briefkasten Manufaktur Lippe GmbH
Werler Straße 60
32105 Bad Salzuflen

www.briefkasten-manufaktur.de
info@briefkasten-manufaktur.de
Tel.: +49 5222 807110

Geschäftsführer Oliver Woineck
Ust.ID.Nr. DE303690847
Handelsregister Amtsgericht Lemgo, HRB 8618







Briefkasten Manufaktur Lippe GmbH
Werler Straße 60
32105 Bad Salzuflen

www.briefkasten-manufaktur.de
info@briefkasten-manufaktur.de
Tel.: +49 5222 807110

Geschäftsführer Oliver Woineck
Ust.ID.Nr. DE303690847
Handelsregister Amtsgericht Lemgo, HRB 8618