6-mailbox GOETHE system with 6 milk compartments for newspapers and storage – surface-mounted – choice of RAL colour

Product number BML3D-ACEY2W5NAM



Product description

GOETHE for six households: wall-mounted mailbox system compliant with the Swiss PTT postal standard, in your choice of RAL colour

This mailbox system from the GOETHE series combines six mailboxes with six separate newspaper/storage compartments, known as milk compartments. The mailboxes comply with the Swiss PTT postal standard.

The system is supplied for surface mounting, with close-fitting cladding, a flat rain canopy and mounting rails. The powder-coated finish is available in your choice of RAL colour. Mail is retrieved from the front.

Features of this mailbox system

- Overall external dimensions of the system: 1212 × 808 × 425 mm (W × H × D).
- 6 mailboxes with front mail retrieval and 2 nameplates each, giving a total of 12 nameplates.
- 6 additional stainless steel milk compartments for newspapers and storage; external dimensions per compartment: 400 × 200 × 400 mm (W × H × D).
- Surface mounting with 2 wall-mounting rails, each 1080 mm long.
- Body made from grade 1.4016 stainless steel and front panels made from V2A grade 1.4301 stainless steel.
- Close-fitting cladding made from 3 mm AlMg3 W19 aluminium, with 2 side panels and a flat rain canopy.
- Powder-coated finish in your choice of RAL colour.
- 6 keyed-to-differ Push-Key locks, one per mailbox.

Special features of this mailbox system

Swiss PTT postal standard and separate milk compartments

The mailboxes comply with the Swiss PTT postal standard. They are complemented by six separate newspaper/storage compartments, known as milk compartments.

Briefkasten Manufaktur Lippe GmbH
Werler Straße 60
32105 Bad Salzuflen

www.briefkasten-manufaktur.de
info@briefkasten-manufaktur.de
Tel.: +49 5222 807110

Geschäftsführer Oliver Woineck
Ust.ID.Nr. DE303690847
Handelsregister Amtsgericht Lemgo, HRB 8618

These compartments open upwards and provide space for newspapers, magazines and items left for collection. They are not secure parcel boxes. The stated compartment dimensions are external dimensions, not usable internal dimensions or maximum parcel dimensions.

Damped letter flap and thoughtful mail retrieval design

The mailboxes feature a rainwater run-off edge, a continuous rubber lip and a damped letter flap for quiet delivery. The letter slot is sized for DIN-C4 envelopes.

The retrieval door is designed to help prevent mail from falling out when opened. The height of the letter slot and the tapered chute make unauthorised retrieval through the slot more difficult.

Keyed-to-differ Push-Key locks

Each of the six mailboxes is fitted with its own Push-Key lock. The locks are keyed to differ, so each mailbox has a different key.

Two nameplates per mailbox with a no-advertising notice

The twelve BASIC type 2 nameplates are made from crystal-clear polycarbonate. You can replace their inserts from the front.

A “No advertising, thank you” insert is included. This allows you to display a notice about unwanted advertising alongside your name on the mailbox.

Individually configurable

Design your mailbox system to suit your home: select “Configure now” to adapt this configuration to your preferences.

- Mailbox finish: customise the colour in the 3D configurator using the colours available for this version.
- Personalised lettering: add your own names, house numbers or preferred text to the designated areas. Any lettering shown is an example and can be replaced.
- Font styling: choose from the fonts available for lettering and adjust the appearance in the configurator.
- Equipment: add or change compatible components from the selection available for the system.

When you make individual changes, the dimensions and price are recalculated in the 3D configurator to reflect your selection.

Important information

Water protection: a sheltered location, ideally beneath a canopy, helps protect your mail. Mail should be fully inserted and the letter flap closed.

Installation: check the mounting surface and installation conditions against the overall dimensions and installation instructions.

Product properties

Series	GOETHE
Access control	Push-Key
Number of boxes	with 6 letterboxes
Name labelling	Nameplate
Material	Aluminium AlMg3 W19, Stainless steel V2A 1.4301, Stainless steel 1.4016 (non-rusting magnetic stainless steel)
Removal of mail	On the front
Surface/colour	RAL of your choice (according to colour table)
Mounting type	Surface-mounted

Briefkasten Manufaktur Lippe GmbH
Werler Straße 60
32105 Bad Salzuflen

www.briefkasten-manufaktur.de
info@briefkasten-manufaktur.de
Tel.: +49 5222 807110

Geschäftsführer Oliver Woineck
Ust.ID.Nr. DE303690847
Handelsregister Amtsgericht Lemgo, HRB 8618

Dimensions

Height of single box in mm	200
Width of single box in mm	400
Overall height in mm	808
Total width in mm	1212
Depth in mm	425

Dimension drawing

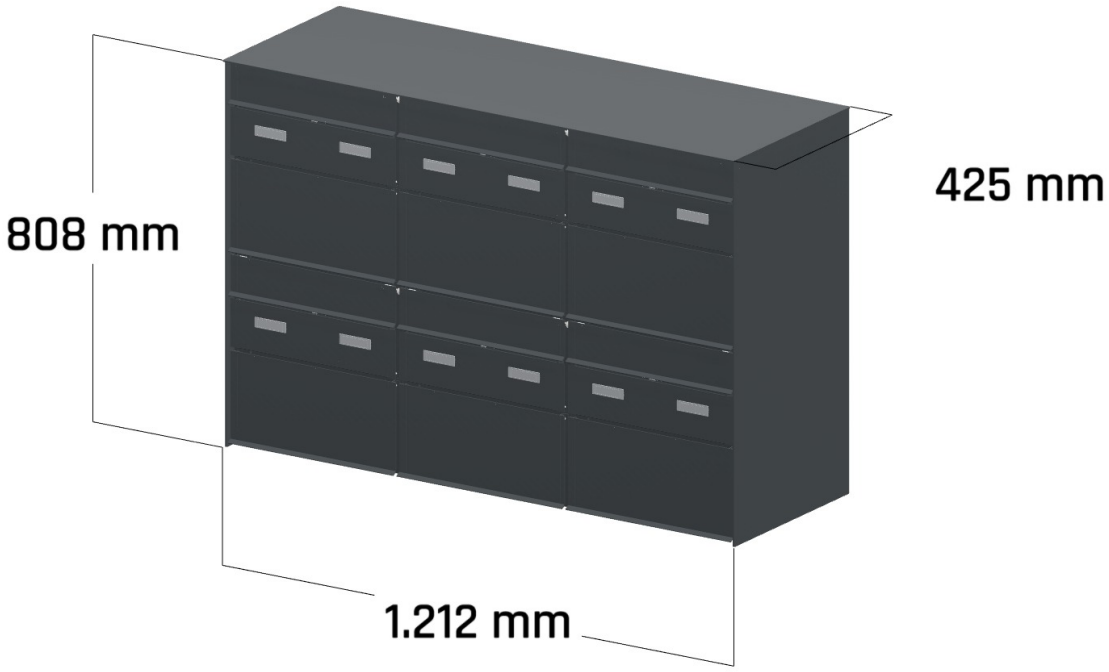

Briefkasten Manufaktur Lippe GmbH
Werler Straße 60
32105 Bad Salzuflen

www.briefkasten-manufaktur.de
info@briefkasten-manufaktur.de
Tel.: +49 5222 807110

Geschäftsführer Oliver Woineck
Ust.ID.Nr. DE303690847
Handelsregister Amtsgericht Lemgo, HRB 8618

More images

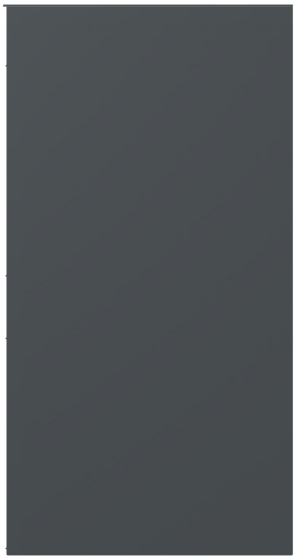



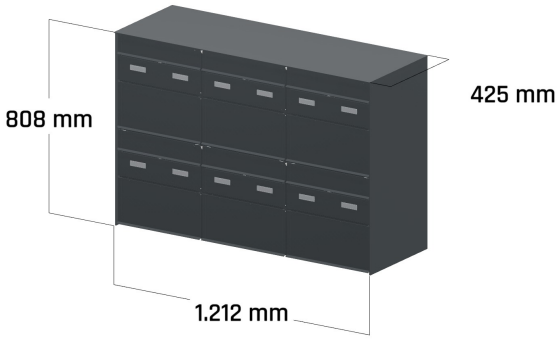



Briefkasten Manufaktur Lippe GmbH
Werler Straße 60
32105 Bad Salzuflen

www.briefkasten-manufaktur.de
info@briefkasten-manufaktur.de
Tel.: +49 5222 807110

Geschäftsführer Oliver Woineck
Ust.ID.Nr. DE303690847
Handelsregister Amtsgericht Lemgo, HRB 8618