5-piece stainless steel free-standing letterbox Design BASIC Plus 381X ST-R with bell box - RAL of your choice | Right | 100mm depth | ? Colour of your choice | with 5 mailboxes (3x2)



Product number 381X-5-SP-100-R

Product description

5-piece 2x3 stainless steel free-standing letterbox system design BASIC Plus 381X ST-R with bell box for doorbell intercom - RAL of your choice

Modern free-standing letterbox for 5 parties - made in Germany by Briefkasten Manufaktur.

The letterboxes are made of stainless steel V2A, powder-coated in RAL colour, the stand elements are made of weather-resistant stainless steel V2A, polished. The very high-quality workmanship and the well thought-out concept make this free-standing letterbox our top seller. A rain drainage edge for optimum water protection, a continuous rubber lip for quiet insertion, the solid interchangeable nameplate, a practical post holder and the very robust lock characterise this free-standing letterbox. The side panelling with protruding rain cover made of V2A stainless steel offers optimum protection against the weather and guarantees a very long service life.

The letterbox systems in the BASIC Plus collection are characterised by the consistent use of V2A stainless steel. The result is a very long service life and sustainability. The design has been developed by our own engineers with a view to high flexibility and modularity, simple spare parts assembly and uncomplicated self-assembly. Spare parts are directly available for all BASIC Plus systems.

Briefkasten Manufaktur Lippe GmbH
Werler Straße 60
32105 Bad Salzuflen

www.briefkasten-manufaktur.de
info@briefkasten-manufaktur.de
Tel.: +49 5222 807110

Geschäftsführer Oliver Woineck
Ust.ID.Nr. DE303690847
Handelsregister Amtsgericht Lemgo, HRB 8618

- **5-post letterbox made of V2A stainless steel, powder-coated in RAL colour**
- The system is manufactured by Briefkasten Manufaktur. German quality production "Made in Germany".
- The letterboxes comply with DIN/EN 13724. Insertion size (3.5 cm x 32.5 cm) for C4 landscape, large letters also fit in here without creasing.
- Insertion flap with sound-absorbing rubber seal for very quiet mail insertion.
- The door can be opened from left to right.
- Incl. 2 keys with key number, interchangeable nameplate (type 2) under the flap and post holder.
- Large capacity thanks to optional letterbox depth +50 mm = approx. 17 litres. Suitable for companies and households with very high mail volumes.
- Incl. side cladding + rain cover made of V2A stainless steel, powder-coated in RAL colour.
- **Bell box made of V2A stainless steel, powder-coated in RAL colour fine structure matt**
- Speech perforation with universal adapter. (Intercom system/ built-in loudspeaker not included in scope of delivery). Also available without speech perforation.
- Universal adapter is suitable for all commercially available built-in loudspeakers (Siedle, Ritto, TCS, Busch-Jäger, Gira, Legrand Bticino, ELCOM, Auerswald, Comelit and many more).
- Round stainless steel bell push-button, max. switching capacity: 5A @ 250V AC, IP 65 (pressure force limitation).
- Anti-vandalism - The nameplate is indentation-proof and impact-resistant, the plastic is flame-retardant.
- Cable access: Ø 10.4 mm (lateral). Invisible cable routing through the stand element.
- The stand elements are made of 42.4 mm V2A stainless steel 1.4301, polished for screw mounting or setting in concrete.

Important information

Camera or intercom preparation

The intercom systems must be connected by an electrician. Please contact your trusted electrician for planning, fitting and installation.

Water protection

The mail is only protected against moisture and dirt when it is fully inserted and the flap is closed. Under certain extreme weather conditions, water may still enter (up to 1ccm according to DIN EN 13724). This is not a reason for complaint.

Briefkasten Manufaktur Lippe GmbH
Werler Straße 60
32105 Bad Salzuflen

www.briefkasten-manufaktur.de
info@briefkasten-manufaktur.de
Tel.: +49 5222 807110

Geschäftsführer Oliver Woineck
Ust.ID.Nr. DE303690847
Handelsregister Amtsgericht Lemgo, HRB 8618

Product properties

Surface/colour	RAL 9005 deep black, RAL 3004 crimson red, DB 703 iron mica, RAL 7016 anthracite grey, RAL of your choice (according to colour table), Brushed, RAL 9007 grey aluminium, RAL 9016 traffic white
Series	BASIC
Number of bell push buttons	5 buttons
Functions	Newspaper compartment, Light button, Camera, Intercom
Functional box prepared for manufacturer	GIRA, Busch Jaeger, Siedle, STR Elektronik, ELCOM, TCS, Ritto, ALGO, Telegärtner, Auerswald, Legrand Bticino, Comelit
Boxes by volume	Normal > 10 litres
Name labelling	Nameplate
Mounting type	Free-standing
Material	Stainless steel V2A 1.4301
Removal of mail	On the front
Number of boxes	with 5 letterboxes

Dimensions

Height of single box in mm	330,0
Width of single box in mm	355,0
Capacity in litres	12,0 | 17,0
Height of letterbox slot in mm	35,0
Width of letter slot in mm	325,0
Height of letterbox in mm	660,0
Width of letterbox system in mm	1065,0
Overall height in mm	1200,0 | 1500,0
Total width in mm	1245,0
Depth in mm	100,0 | 150,0
Weight in kg	38
Delivery condition	Supplied in blocks, stand elements / letterbox divided

Briefkasten Manufaktur Lippe GmbH
Werler Straße 60
32105 Bad Salzuflen

www.briefkasten-manufaktur.de
info@briefkasten-manufaktur.de
Tel.: +49 5222 807110

Geschäftsführer Oliver Woineck
Ust.ID.Nr. DE303690847
Handelsregister Amtsgericht Lemgo, HRB 8618

More images





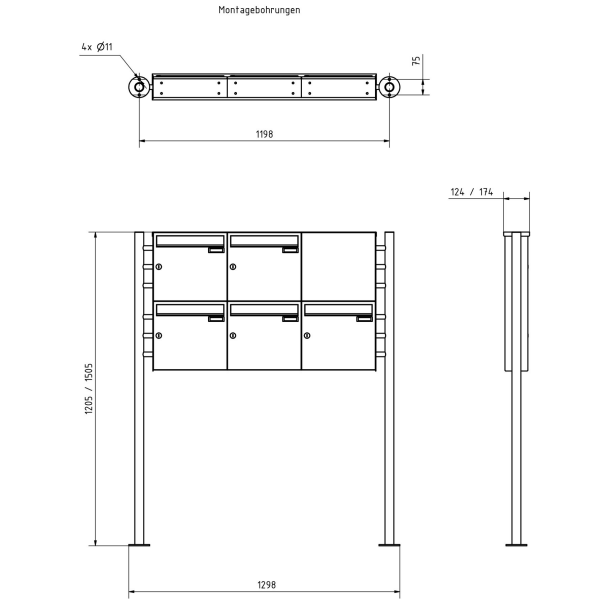



Briefkasten Manufaktur Lippe GmbH
Werler Straße 60
32105 Bad Salzuflen

www.briefkasten-manufaktur.de
info@briefkasten-manufaktur.de
Tel.: +49 5222 807110

Geschäftsführer Oliver Woineck
Ust.ID.Nr. DE303690847
Handelsregister Amtsgericht Lemgo, HRB 8618



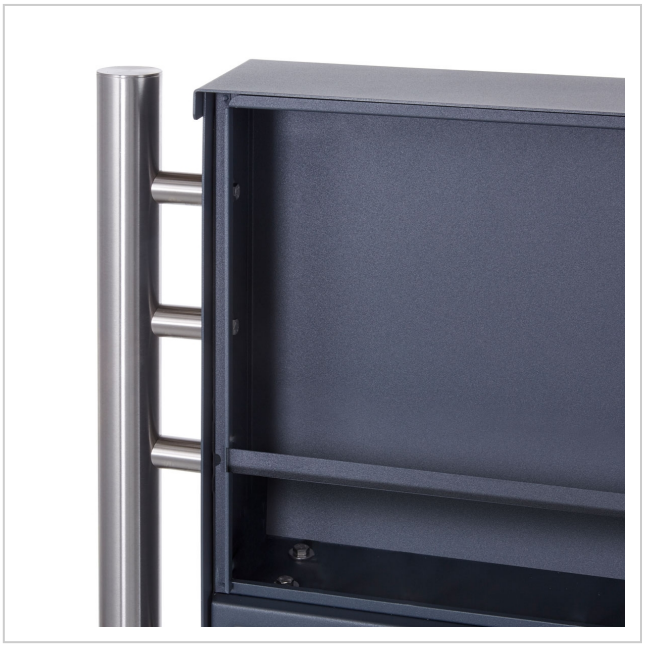





Briefkasten Manufaktur Lippe GmbH
Werler Straße 60
32105 Bad Salzuflen

www.briefkasten-manufaktur.de
info@briefkasten-manufaktur.de
Tel.: +49 5222 807110

Geschäftsführer Oliver Woineck
Ust.ID.Nr. DE303690847
Handelsregister Amtsgericht Lemgo, HRB 8618



Briefkasten Manufaktur Lippe GmbH
Werler Straße 60
32105 Bad Salzuflen

www.briefkasten-manufaktur.de
info@briefkasten-manufaktur.de
Tel.: +49 5222 807110

Geschäftsführer Oliver Woineck
Ust.ID.Nr. DE303690847
Handelsregister Amtsgericht Lemgo, HRB 8618