12x3 stainless steel flush-mounted letterbox system BASIC Plus 382XU UP - polished stainless steel - 12 parties | 100mm depth | with 12 mailboxes (4x3) | Stainless steel, brushed

Product number 382XU-VA-12-100



Product description

12-unit 4x3 stainless steel flush-mounted mailbox system BASIC Plus 382XU UP - brushed stainless steel - 12 households

Modern recessed mailbox for 12 households - made in Germany by Briefkasten Manufaktur.

The mailbox is made entirely of stainless steel V2A, brushed. The very high-quality workmanship and the well-thought-out concept make this flush-mounted mailbox one of our top sellers. A rain drainage edge for optimal water protection, a continuous rubber lip for quiet mail insertion, the solid interchangeable nameplate, a practical mail retention bracket and the very robust lock characterise this recessed mailbox. The flush-mounted frame made of stainless steel V2A is equipped with a foam rubber seal and guarantees very high durability.

The mailboxes of the BASIC Plus collection are characterised by the consistent use of stainless steel V2A. The result is very high durability and sustainability. The construction has been developed by our own engineers with regard to high flexibility/modularity, simple spare-part assembly and straightforward self-installation. Spare parts are directly available for all BASIC Plus systems.

Briefkasten Manufaktur Lippe GmbH
Werler Straße 60
32105 Bad Salzuflen

www.briefkasten-manufaktur.de
info@briefkasten-manufaktur.de
Tel.: +49 5222 807110

Geschäftsführer Oliver Woineck
Ust.ID.Nr. DE303690847
Handelsregister Amtsgericht Lemgo, HRB 8618

- 12-unit flush-mounted mailbox system made entirely of stainless steel V2A 1.4301, 240-grit brushed.
- The system is manufactured by Briefkasten Manufaktur. German quality production "Made in Germany".
- The mailboxes comply with DIN/EN 13724. Letter slot size (3.5 cm x 32.5 cm) for C4 landscape — large letters fit in here without folding.
- Drop flap with noise-dampening rubber seal for very quiet mail insertion.
- The door opens from left to right.
- Includes 2 keys with key number, interchangeable nameplate (Type 2) beneath the letter slot and mail retention bracket.
- Large capacity via optional mailbox depth +50 mm = approx. 17 l. Suitable for businesses and households with very high mail volumes.
- Plaster cover frame made of stainless steel angle profile 25 x 58 mm, 240-grit brushed.

Important information:

Mail is protected from moisture and soiling only when fully inserted and the flap is closed. Under certain extreme weather conditions water may still enter (according to DIN EN 13724 up to 1 cc). This does not constitute grounds for a complaint.

Product properties

Series	BASIC
Boxes by volume	Normal > 10 litres
Name labelling	Nameplate
Material	Stainless steel V2A 1.4301
Removal of mail	On the front
Surface/colour	Brushed
Mounting type	Flush-mounted
Number of boxes	with 12 letterboxes

Dimensions

Height of single box in mm	330.0
Width of single box in mm	355.0
Capacity in litres	12.0 | 17.0
Height of letterbox slot in mm	35.0
Width of letter slot in mm	325.0
Height of letterbox in mm	1040.0
Width of letterbox system in mm	1470.0
Depth in mm	100.0 | 150.0
Weight in kg	48
Delivery condition	Delivered partly disassembled (2 blocks)

Briefkasten Manufaktur Lippe GmbH
Werler Straße 60
32105 Bad Salzuflen

www.briefkasten-manufaktur.de
info@briefkasten-manufaktur.de
Tel.: +49 5222 807110

Geschäftsführer Oliver Woineck
Ust.ID.Nr. DE303690847
Handelsregister Amtsgericht Lemgo, HRB 8618

More images





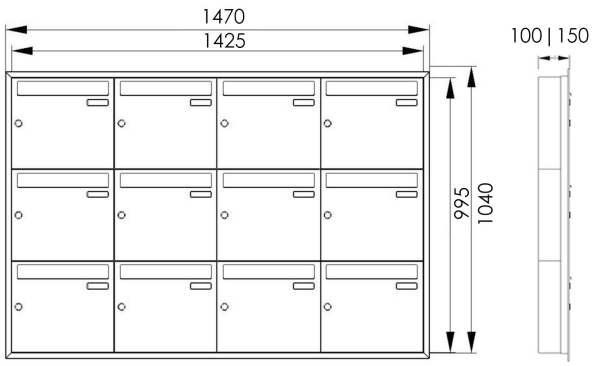



Briefkasten Manufaktur Lippe GmbH
Werler Straße 60
32105 Bad Salzuflen

www.briefkasten-manufaktur.de
info@briefkasten-manufaktur.de
Tel.: +49 5222 807110

Geschäftsführer Oliver Woineck
Ust.ID.Nr. DE303690847
Handelsregister Amtsgericht Lemgo, HRB 8618





Briefkasten Manufaktur Lippe GmbH
Werler Straße 60
32105 Bad Salzuflen

www.briefkasten-manufaktur.de
info@briefkasten-manufaktur.de
Tel.: +49 5222 807110

Geschäftsführer Oliver Woineck
Ust.ID.Nr. DE303690847
Handelsregister Amtsgericht Lemgo, HRB 8618