4-unit (1x4) freestanding mailbox system GOETHE ST-Q-400 - RAL colour of your choice | 400mm depth | with 4 mailboxes



Product number 215-STQ-4S-400

Product description

4-unit 1x4 freestanding mailbox system GOETHE ST-Q-400 - RAL colour of your choice

Freestanding 4-part mailbox system with horizontal boxes 400 mm deep and elegant rectangular stand elements. The modern GOETHE mailbox is ideal for a sophisticated entrance area. Its clean-lined design without a visible lock gives this mailbox a particularly elegant appearance.

The dimensions of the individual boxes provide a capacity of approx. 32 litres; the large slot ensures that DIN C4 envelopes, magazines or post accumulated during several days of absence are not creased. The innovative Push-Key lock is hidden invisibly inside the mailbox. The key is simply inserted into the existing opening (no turning required) and the door opens. The position of the lock is designed so that the retrieval door prevents the mail from falling towards you. An integrated drip edge optimally protects the interior mail from the weather. The flap is fitted with high-quality hinge dampers to ensure quiet closing and to prevent annoying rattling caused by weather. The interchangeable Plexiglas nameplates can be conveniently accessed from the front; for an optimal appearance we recommend the flush-mounted nameplate with laser engraving (see Accessories). The second nameplate is fitted with an insert "Advertising Yes/No".

The mailbox systems of the GOETHE collection are characterised by the consistent use of stainless steel and aluminium. The result is very high durability and sustainability. The construction has been developed by our own engineers with a view to high flexibility and modularity, easy spare-part assembly and straightforward self-assembly. Spare parts for all GOETHE systems are available directly in our shop.

Thanks to the design, self-assembly is uncomplicated.

Protected utility model according to DPMA file number DE: 20 2021 101 679.5

Briefkasten Manufaktur Lippe GmbH
Werler Straße 60
32105 Bad Salzuflen

www.briefkasten-manufaktur.de
info@briefkasten-manufaktur.de
Tel.: +49 5222 807110

Geschäftsführer Oliver Woineck
Ust.ID.Nr. DE303690847
Handelsregister Amtsgericht Lemgo, HRB 8618

- 4-unit freestanding mailbox made of stainless steel and aluminium.
- Mailboxes made of stainless steel 1.4016 (non-rusting magnetic stainless steel), powder-coated in a RAL colour of your choice.
- Quality manufacture - Made in Germany by Briefkasten Manufaktur Lippe.
- Innovative Push-Key lock with 2 keys per party.
- Mail insertion and retrieval are from the front. Insertion flap with high-quality hinge dampers for very quiet mail insertion.
- The mailboxes comply with DIN/EN 13724. Insert size (3.5 cm x 36.0 cm) for C4 in landscape orientation; large items fit without being folded.
- Retrieval doors open from top to bottom, so the mail cannot fall out towards you.
- Plexiglas nameplate for name labelling and a second nameplate with an "Advertising Yes/No" insert per party.
- Optimal protection against rain thanks to drip edges and a rain canopy made from 3 mm aluminium AlMg3 W19, powder-coated in a RAL colour of your choice.
- Side cladding made from 3 mm aluminium AlMg3 W19, powder-coated in a RAL colour of your choice.
- Rear panel made from 1 mm stainless steel V2A 1.4301, powder-coated in a RAL colour of your choice.
- The B 40 mm x D 80 mm support columns consist of 2 mm stainless steel V2A 1.4301, powder-coated in a RAL colour, for embedding in concrete or for screw mounting.

Important information:

To achieve optimal protection of your mail from water, the mailbox or mailbox system should, if possible, be located under a canopy.

Mail is protected from water only if it is placed completely inside the box and the insertion flap is closed. Partially inserted mail allows moisture and dirt to enter the mailbox. This system is protected against ingress of water according to DIN EN 13724. Water ingress is not grounds for a complaint.

Product properties

Surface/colour	RAL 9005 deep black, RAL 3004 crimson red, DB 703 iron mica, RAL 7016 anthracite grey, RAL of your choice (according to colour table), RAL 9007 grey aluminium, RAL 9016 traffic white
Series	GOETHE
Number of boxes	with 4 letterboxes
Name labelling	Nameplate
Material	Aluminium AlMg3 W19, Stainless steel V2A 1.4301, Stainless steel 1.4016 (non-rusting magnetic stainless steel)
Mounting type	Free-standing
Removal of mail	On the front
Boxes by volume	Large > 16 litres

Briefkasten Manufaktur Lippe GmbH
Werler Straße 60
32105 Bad Salzuflen

www.briefkasten-manufaktur.de
info@briefkasten-manufaktur.de
Tel.: +49 5222 807110

Geschäftsführer Oliver Woineck
Ust.ID.Nr. DE303690847
Handelsregister Amtsgericht Lemgo, HRB 8618

Dimensions

Width in mm	1
Height in mm	1
Height of single box in mm	200,0
Width of single box in mm	400,0
Capacity in litres	32
Height of letterbox slot in mm	35,0
Width of letter slot in mm	360,0
Height of letterbox in mm	800,0
Width of letterbox system in mm	400,0
Overall height in mm	1500,0 | 1700,0 + 23,0
Total width in mm	488,0
Depth in mm	400.0 + 25.0 Rain roof
Weight in kg	60
Delivery condition	Supplied in blocks, stand elements / letterbox divided

Dimension drawing

Briefkasten Manufaktur Lippe GmbH
Werler Straße 60
32105 Bad Salzuflen

www.briefkasten-manufaktur.de
info@briefkasten-manufaktur.de
Tel.: +49 5222 807110

Geschäftsführer Oliver Woineck
Ust.ID.Nr. DE303690847
Handelsregister Amtsgericht Lemgo, HRB 8618

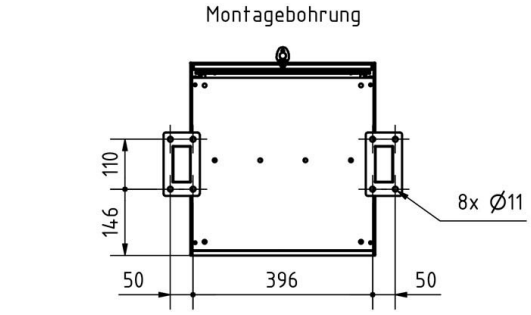
Montagebohrung
110
146
8x Ø11
50
396
50

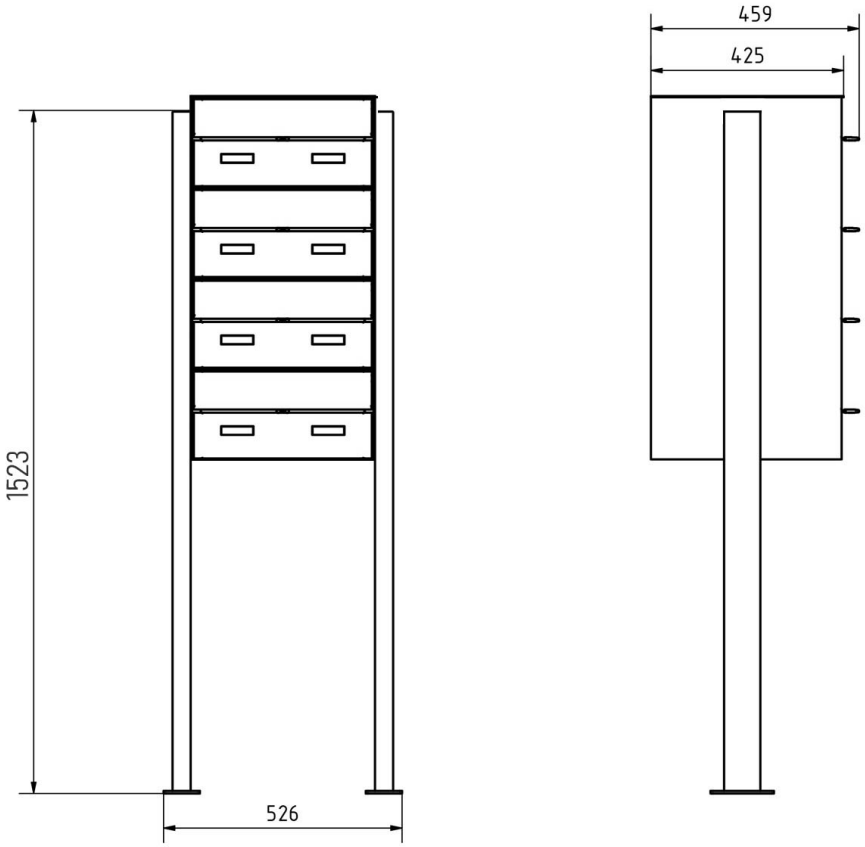
459
425
1523
526

More images

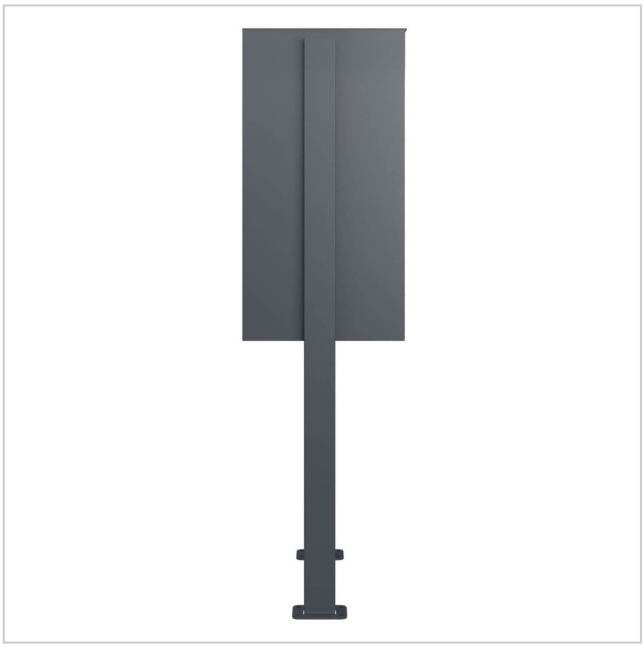





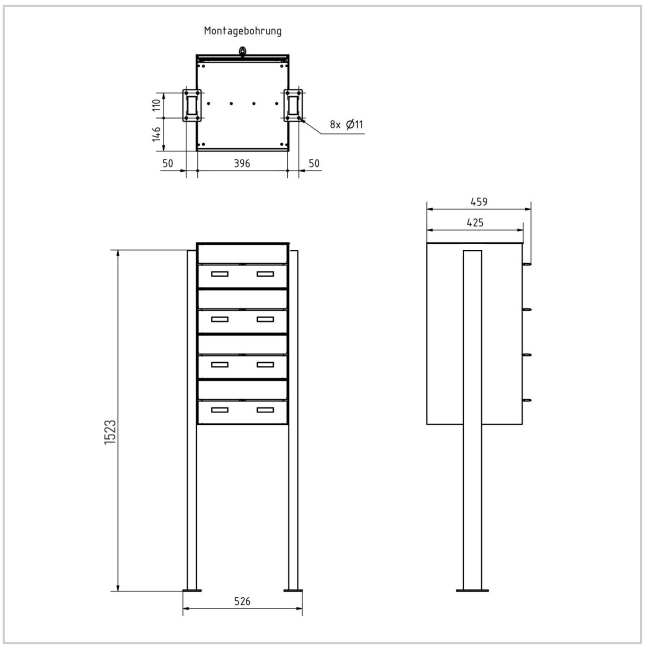

Briefkasten Manufaktur Lippe GmbH
Werler Straße 60
32105 Bad Salzuflen

www.briefkasten-manufaktur.de
info@briefkasten-manufaktur.de
Tel.: +49 5222 807110

Geschäftsführer Oliver Woineck
Ust.ID.Nr. DE303690847
Handelsregister Amtsgericht Lemgo, HRB 8618



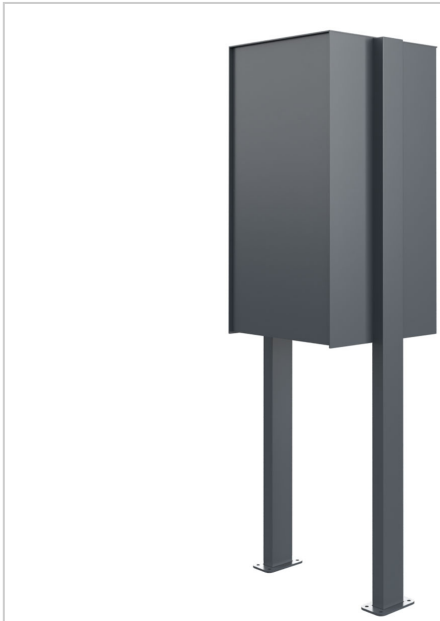



Briefkasten Manufaktur Lippe GmbH
Werler Straße 60
32105 Bad Salzuflen

www.briefkasten-manufaktur.de
info@briefkasten-manufaktur.de
Tel.: +49 5222 807110

Geschäftsführer Oliver Woineck
Ust.ID.Nr. DE303690847
Handelsregister Amtsgericht Lemgo, HRB 8618