4-unit flush-mounted mailbox system BASIC 382U UP with side-mounted doorbell box - RAL 7016 anthracite grey | RAL 7016 Anthracite grey, fine texture, matt | Left | 100mm depth | with 4 mailboxes



Product number 382U-7016-4-SPS-L-100

Product description

4-unit flush-mounted letterbox system BASIC 382U UP with side bell box - RAL 7016 anthracite grey

Modern flush-mounted letterbox for 4 units - made in Germany by Briefkasten Manufaktur.

The letterbox is made of galvanised steel, powder-coated in RAL 7016 Anthracite Grey. The very high-quality workmanship and the well-thought-out concept make this flush-mounted letterbox one of our top sellers. A rain runoff edge for optimal water protection, a continuous rubber lip for quiet posting, the solid interchangeable nameplate, a practical mail retention bracket and the very robust lock characterise this flush-mounted letterbox. The flush-mounted frame made of stainless steel V2A is equipped with a foam rubber gasket and guarantees very long durability.

Thanks to the design, DIY installation is straightforward.

Briefkasten Manufaktur Lippe GmbH
Werler Straße 60
32105 Bad Salzuflen

www.briefkasten-manufaktur.de
info@briefkasten-manufaktur.de
Tel.: +49 5222 807110

Geschäftsführer Oliver Woineck
Ust.ID.Nr. DE303690847
Handelsregister Amtsgericht Lemgo, HRB 8618

- **4-unit flush-mounted letterbox system made of galvanised steel, powder-coated in RAL 7016 Anthracite Grey**
- The system is manufactured by Briefkasten Manufaktur. German quality production "Made in Germany".
- The letterboxes comply with DIN/EN 13724. Aperture size (3.5 cm x 32.5 cm) for C4 landscape; large envelopes will fit without folding.
- Drop flap with noise-dampening rubber seal for very quiet posting.
- The door opens from left to right.
- Includes 2 keys with key number, interchangeable nameplate (Type 2) under the mail flap and mail retention bracket.
- Large capacity with optional mailbox depth +50 mm = approx. 17 l. Suitable for businesses and households with very high mail volumes.
- **Bell box made of galvanised steel, powder-coated in RAL 7016 Anthracite Grey**
- Speech aperture with universal adapter. (Intercom system / built-in speaker not included). Optionally also available without speech aperture.
- The universal adapter is suitable for all common built-in speakers (Siedle, Ritto, TCS, Busch-Jäger, Gira, Legrand Bticino, ELCOM, Auerswald, Comelit etc.).
- 4x round stainless-steel doorbell buttons.
- Plaster cover frame made of stainless-steel angle profile 25 x 58 mm, powder-coated in RAL colour.

Important information

Camera or intercom preparation

The intercoms must be connected by a qualified electrician. For planning, installation and setup, consult the electrician of your choice.

Water protection

Mail is protected from moisture and dirt only when fully inserted and the flap is closed. Under certain extreme weather conditions water may still enter (according to DIN EN 13724 up to 1 cm^3). This does not constitute grounds for a complaint.

Product properties

Material	Steel, galvanised
Series	BASIC
Number of bell push buttons	4 buttons
Functions	Light button, Intercom
Functional box prepared for manufacturer	GIRA, Busch Jaeger, Siedle, STR Elektronik, ELCOM, TCS, Ritto, ALGO, Telegärtner, Auerswald, Legrand Bticino, Comelit
Number of boxes	with 4 parcel boxes
Boxes by volume	Normal > 10 litres
Name labelling	Nameplate
Removal of mail	On the front
Surface/colour	Brushed
Mounting type	Flush-mounted

Briefkasten Manufaktur Lippe GmbH
Werler Straße 60
32105 Bad Salzuflen

www.briefkasten-manufaktur.de
info@briefkasten-manufaktur.de
Tel.: +49 5222 807110

Geschäftsführer Oliver Woineck
Ust.ID.Nr. DE303690847
Handelsregister Amtsgericht Lemgo, HRB 8618

Dimensions

Height of single box in mm	330.0
Width of single box in mm	355.0
Capacity in litres	12.0 | 17.0
Height of letterbox slot in mm	35.0
Width of letter slot in mm	325.0
Height of letterbox in mm	710.0
Width of letterbox system in mm	930.0
Total width in mm	930.0
Depth in mm	100.0 | 150.0
Weight in kg	34
Delivery condition	Delivered fully assembled.

Briefkasten Manufaktur Lippe GmbH
Werler Straße 60
32105 Bad Salzuflen

www.briefkasten-manufaktur.de
info@briefkasten-manufaktur.de
Tel.: +49 5222 807110

Geschäftsführer Oliver Woineck
Ust.ID.Nr. DE303690847
Handelsregister Amtsgericht Lemgo, HRB 8618

More images



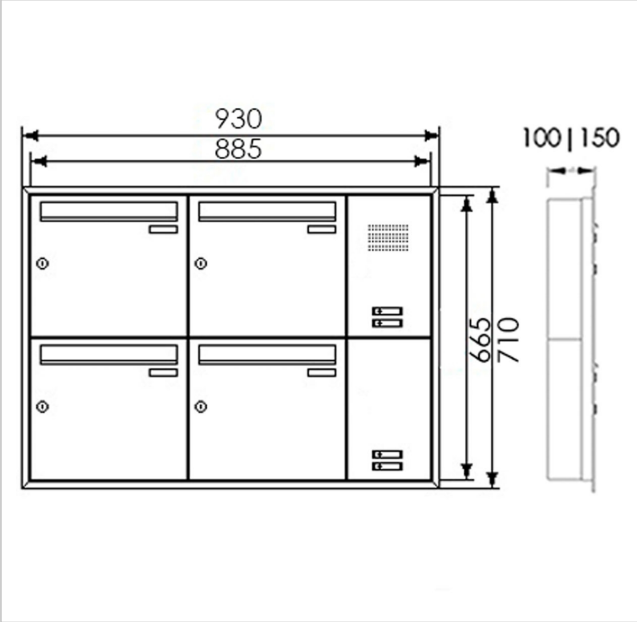

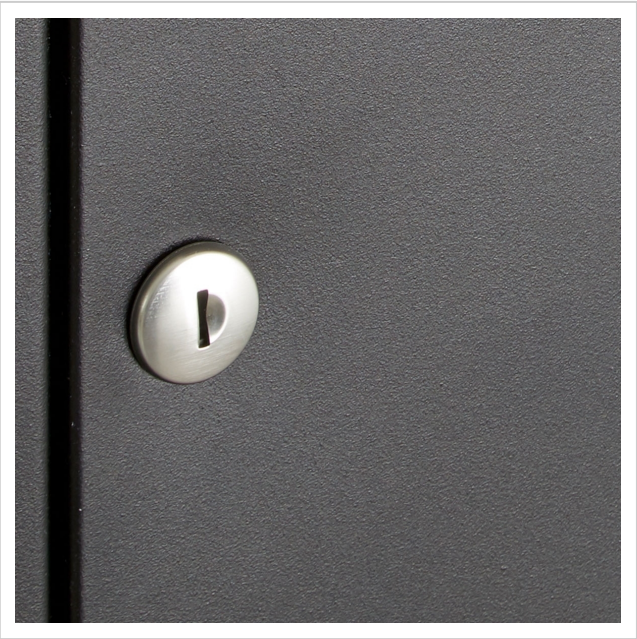



Briefkasten Manufaktur Lippe GmbH
Werler Straße 60
32105 Bad Salzuflen

www.briefkasten-manufaktur.de
info@briefkasten-manufaktur.de
Tel.: +49 5222 807110

Geschäftsführer Oliver Woineck
Ust.ID.Nr. DE303690847
Handelsregister Amtsgericht Lemgo, HRB 8618







Briefkasten Manufaktur Lippe GmbH
Werler Straße 60
32105 Bad Salzuflen

www.briefkasten-manufaktur.de
info@briefkasten-manufaktur.de
Tel.: +49 5222 807110

Geschäftsführer Oliver Woineck
Ust.ID.Nr. DE303690847
Handelsregister Amtsgericht Lemgo, HRB 8618