4-unit stainless steel mailbox system Design BASIC Plus 385XW for side wall mounting - RAL colour of your choice | Right | with 4 mailboxes (1x4)



Product number 385XW-4S-R

Product description

Side-mounted BASIC Plus 385XW mailbox system for 4 households – box position right

The BASIC Plus 385XW is a high-quality stainless steel mailbox system for side wall mounting for 4 households. It has been developed for apartment buildings, residential properties and smaller commercial properties and enables space-saving installation to the side of the entrance or on a suitable wall surface.

Four mailboxes are combined in a slim, vertical unit – ideal where there is little space at the front of the entrance.

The mailboxes are made of stainless steel V2A 1.4301 and are powder-coated in a RAL or DB colour of choice. The rain hood and side cladding are also manufactured from stainless steel. The side fixing is carried out using 60.3 mm diameter stainless steel posts with a 240-grit finish.

In this product variant the box position is on the right. The side arrangement creates a clear mounting edge and allows the mailbox system to be aligned to the entrance situation on site.

The advantages of the BASIC Plus 385XW at a glance

Robust stainless steel mounting posts

The side wall fixing is effected via Ø 60.3 mm stainless steel V2A 1.4301 posts with a 240-grit finish. They provide a stable and long-lasting connection between the mailbox system and the building wall.

Side wall mounting

The 385XW is mounted to a suitable house wall at the side. The box position of this variant is on the right; this allows the unit to be specifically adapted to the existing entrance situation.

Briefkasten Manufaktur Lippe GmbH
Werler Straße 60
32105 Bad Salzuflen

www.briefkasten-manufaktur.de
info@briefkasten-manufaktur.de
Tel.: +49 5222 807110

Geschäftsführer Oliver Woineck
Ust.ID.Nr. DE303690847
Handelsregister Amtsgericht Lemgo, HRB 8618

BASIC Plus in stainless steel V2A

Mailboxes, cladding and the fixing elements consistently use stainless steel V2A 1.4301. The powder-coated mailboxes combine a high-quality surface with a durable construction.

DIN C4 letter slot with rubber lip

Each compartment has a 35 × 265 mm insertion opening suitable for DIN C4 upright. A noise-dampening rubber lip reduces the impact noise of the flap.

Robust solution for 4 households

Four separate mailboxes combine high everyday practicality with particularly space-saving side mounting. The modular BASIC Plus construction also facilitates maintenance and spare part installation.

Equipment of the BASIC Plus 385XW for 4 households

Mailbox system

Number of compartments 4 mailboxes
Arrangement 1 column × 4 rows
Material Stainless steel V2A 1.4301
Surface Powder-coated in RAL/DB colour of choice
Rain hood / side cladding Stainless steel V2A 1.4301, powder-coated in matching colour
Manufacture Made in Germany by Briefkasten Manufaktur Lippe

Mail and operation

Insertion opening 35 × 265 mm per mailbox, suitable for DIN C4 (portrait)
Mail volume Approx. 12 litres per mailbox
Letter flaps With noise-dampening rubber lip
Mail retrieval Front-facing
Door opening From left to right
Keys 8 keys in total, 2 per mailbox
Nameplates 4 interchangeable nameplates beneath the letter flaps

Side fixing

Box position Right
Mounting posts Ø 60.3 mm stainless steel V2A 1.4301
Posts surface 240-grit finish
Mounting method Screw fixing to a suitable house wall
Fixings Select bolt anchors or coach screws on site appropriate to the wall
Standard Mailboxes conforming to DIN EN 13724

Note on side wall mounting

The wall must be clean, even and sufficiently load-bearing for the weight of the complete mailbox system. Bolt anchors or coach screws are not included and must be selected to suit the wall construction, system weight and local installation situation.

Briefkasten Manufaktur Lippe GmbH
Werler Straße 60
32105 Bad Salzuflen

www.briefkasten-manufaktur.de
info@briefkasten-manufaktur.de
Tel.: +49 5222 807110

Geschäftsführer Oliver Woineck
Ust.ID.Nr. DE303690847
Handelsregister Amtsgericht Lemgo, HRB 8618

Note on weather protection

Mail items must be fully inserted so that the flap can close. The insertion front should, if possible, not face the prevailing weather. Under extreme weather conditions, moisture may penetrate despite norm-compliant construction.

Care and BASIC Plus construction

Stainless steel V2A is low-maintenance and durable. The modular BASIC Plus construction has been designed for uncomplicated installation and good spare-parts availability.

Product properties

Surface/colour	RAL 9005 deep black, RAL 3004 crimson red, DB 703 iron mica, RAL 7016 anthracite grey, RAL of your choice (according to colour table), RAL 9007 grey aluminium, RAL 9016 traffic white
Series	BASIC
Boxes by volume	Normal > 10 litres
Number of boxes	with 4 letterboxes
Name labelling	Nameplate
Material	Stainless steel V2A 1.4301
House number	House number as laser engraving
Removal of mail	On the front
Mounting type	Surface-mounted

Briefkasten Manufaktur Lippe GmbH
Werler Straße 60
32105 Bad Salzuflen

www.briefkasten-manufaktur.de
info@briefkasten-manufaktur.de
Tel.: +49 5222 807110

Geschäftsführer Oliver Woineck
Ust.ID.Nr. DE303690847
Handelsregister Amtsgericht Lemgo, HRB 8618

Dimensions

Height in mm	600
Height of single box in mm	110.0
Width of single box in mm	300.0
Capacity in litres	12
Height of letterbox slot in mm	35.0
Width of letter slot in mm	265.0
Height of letterbox in mm	440.0
Width of letterbox system in mm	300.0
Total width in mm	400.0
Depth in mm	435.0
Weight in kg	29
Delivery condition	Delivery is made in blocks; freestanding elements / mailbox are delivered in parts.

Dimension drawing

Briefkasten Manufaktur Lippe GmbH
Werler Straße 60
32105 Bad Salzuflen

www.briefkasten-manufaktur.de
info@briefkasten-manufaktur.de
Tel.: +49 5222 807110

Geschäftsführer Oliver Woineck
Ust.ID.Nr. DE303690847
Handelsregister Amtsgericht Lemgo, HRB 8618

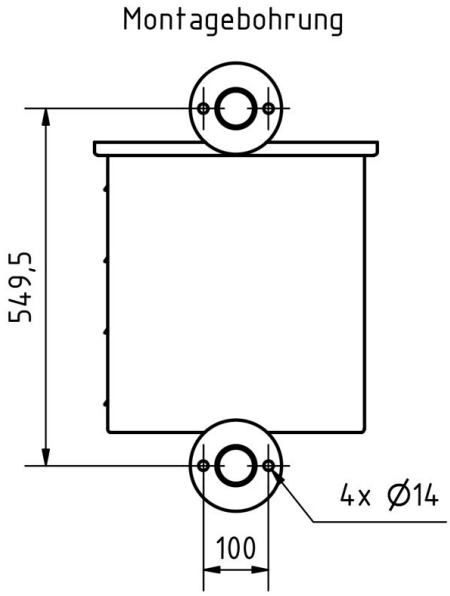

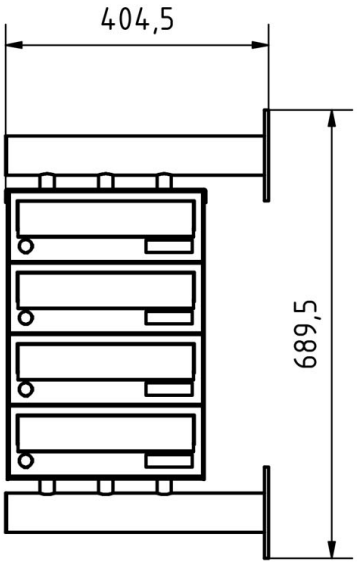

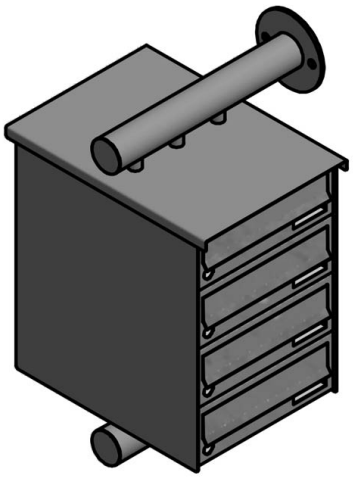

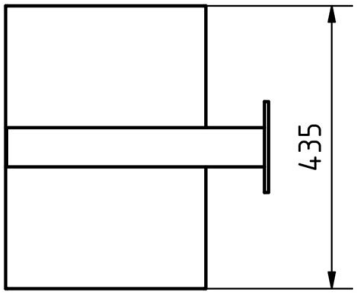

Briefkasten Manufaktur Lippe GmbH
Werler Straße 60
32105 Bad Salzuflen

www.briefkasten-manufaktur.de
info@briefkasten-manufaktur.de
Tel.: +49 5222 807110

Geschäftsführer Oliver Woineck
Ust.ID.Nr. DE303690847
Handelsregister Amtsgericht Lemgo, HRB 8618

More images



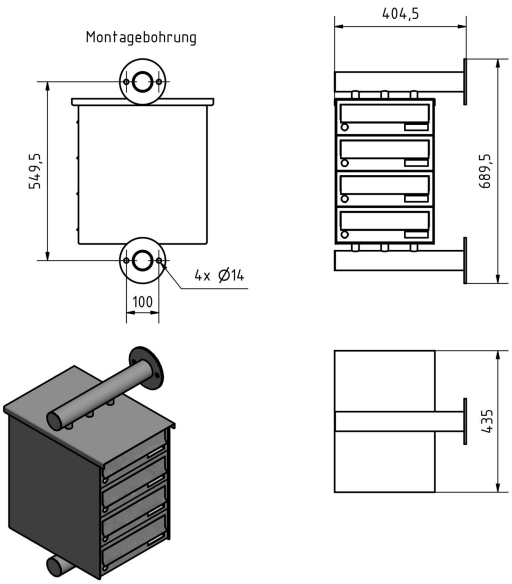





Briefkasten Manufaktur Lippe GmbH
Werler Straße 60
32105 Bad Salzuflen

www.briefkasten-manufaktur.de
info@briefkasten-manufaktur.de
Tel.: +49 5222 807110

Geschäftsführer Oliver Woineck
Ust.ID.Nr. DE303690847
Handelsregister Amtsgericht Lemgo, HRB 8618









Briefkasten Manufaktur Lippe GmbH
Werler Straße 60
32105 Bad Salzuflen

www.briefkasten-manufaktur.de
info@briefkasten-manufaktur.de
Tel.: +49 5222 807110

Geschäftsführer Oliver Woineck
Ust.ID.Nr. DE303690847
Handelsregister Amtsgericht Lemgo, HRB 8618







Briefkasten Manufaktur Lippe GmbH
Werler Straße 60
32105 Bad Salzuflen

www.briefkasten-manufaktur.de
info@briefkasten-manufaktur.de
Tel.: +49 5222 807110

Geschäftsführer Oliver Woineck
Ust.ID.Nr. DE303690847
Handelsregister Amtsgericht Lemgo, HRB 8618