9-piece stainless steel surface-mounted letterbox design BASIC Plus 382XA AP - polished V2A stainless steel | 150mm depth | with 9 letterboxes | Stainless steel, brushed



Product number 382XA-VA-9-150

Product description

9-unit Surface-mounted Mailbox Design BASIC Plus 382XA AP - V2A Stainless Steel, brushed

High-quality surface-mounted mailbox for 9 households made in Germany by Briefkasten Manufaktur.

The complete surface-mounted mailbox system is made of V2A stainless steel, brushed. The very high-quality workmanship and well-thought-out concept make this mailbox system one of our top sellers. A drip edge for optimal water protection, a continuous rubber lip for quiet insertion, the robust interchangeable nameplate, a practical mail retention bar and a durable lock characterise this surface-mounted mailbox system.

The mailboxes of the BASIC Plus collection are distinguished by the consistent use of V2A stainless steel. The result is very high durability and sustainability. The construction has been developed by our own engineers with a focus on high flexibility and modularity, easy spare-part replacement and straightforward self-installation. Spare parts for all BASIC Plus systems are readily available.

Thanks to the design, self-installation is uncomplicated. The mailbox system is prepared for uncomplicated complete installation; there is no need for time-consuming wall mounting of individual boxes.

Briefkasten Manufaktur Lippe GmbH
Werler Straße 60
32105 Bad Salzuflen

www.briefkasten-manufaktur.de
info@briefkasten-manufaktur.de
Tel.: +49 5222 807110

Geschäftsführer Oliver Woineck
Ust.ID.Nr. DE303690847
Handelsregister Amtsgericht Lemgo, HRB 8618

- 9-unit surface-mounted mailbox system with mailboxes made of V2A stainless steel, brushed.
- The system is manufactured by Briefkasten Manufaktur. German quality manufacturing "Made in Germany".
- The mailboxes comply with DIN/EN 13724. Insertion aperture size (3.5 cm x 32.5 cm) for C4 landscape; large letters fit in without folding.
- Insertion flaps with noise-damping rubber seal for very quiet mail insertion.
- The doors open from left to right.
- Includes 2 keys with key number, an interchangeable nameplate under the insertion flap and a mail retention bar per mailbox.
- Large capacity through optional mailbox depth +50 mm = approx. 17 l. Suitable for businesses and households with very high mail volumes.
- Includes side cladding and rain cover made of V2A stainless steel, brushed.
- For wall mounting; includes mounting rail and fixing materials (screws + wall plugs).

Important information:

Mail is only protected from moisture and dirt when fully inserted and the flap is closed. Under certain extreme weather conditions, water may still enter (according to DIN EN 13724 up to 1 cm³). This is not a basis for a complaint.

Product properties

Series	BASIC
Number of boxes	with 9 letterboxes
Name labelling	Nameplate
Material	Stainless steel V2A 1.4301
Removal of mail	On the front
Surface/colour	Brushed
Boxes by volume	Large > 16 litres
Mounting type	Surface-mounted

Dimensions

Height of single box in mm	330.0
Width of single box in mm	355.0
Capacity in litres	12.0 | 17.0
Height of letterbox slot in mm	35.0
Width of letter slot in mm	325.0
Height of letterbox in mm	990.0
Width of letterbox system in mm	1065.0
Depth in mm	100.0 | 150.0
Weight in kg	39
Delivery condition	Delivered pre-assembled/partially disassembled

Briefkasten Manufaktur Lippe GmbH
Werler Straße 60
32105 Bad Salzuflen

www.briefkasten-manufaktur.de
info@briefkasten-manufaktur.de
Tel.: +49 5222 807110

Geschäftsführer Oliver Woineck
Ust.ID.Nr. DE303690847
Handelsregister Amtsgericht Lemgo, HRB 8618

More images





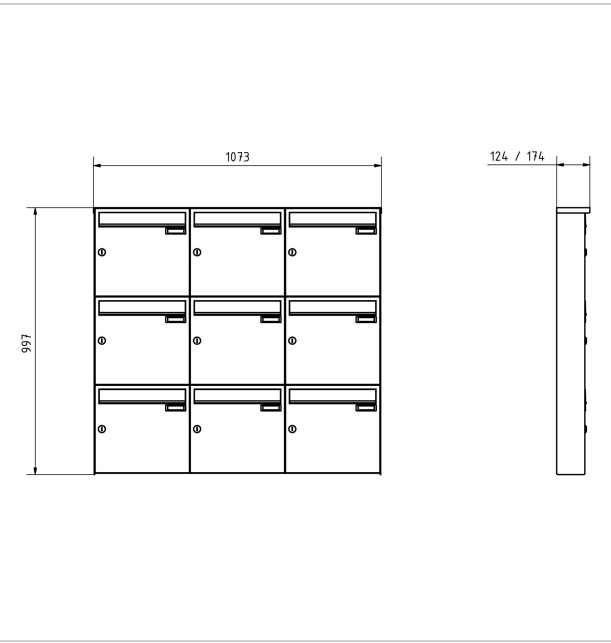



Briefkasten Manufaktur Lippe GmbH
Werler Straße 60
32105 Bad Salzuflen

www.briefkasten-manufaktur.de
info@briefkasten-manufaktur.de
Tel.: +49 5222 807110

Geschäftsführer Oliver Woineck
Ust.ID.Nr. DE303690847
Handelsregister Amtsgericht Lemgo, HRB 8618







Briefkasten Manufaktur Lippe GmbH
Werler Straße 60
32105 Bad Salzuflen

www.briefkasten-manufaktur.de
info@briefkasten-manufaktur.de
Tel.: +49 5222 807110

Geschäftsführer Oliver Woineck
Ust.ID.Nr. DE303690847
Handelsregister Amtsgericht Lemgo, HRB 8618