6 doorbell pedestal designer - stainless steel V2A powder-coated with DoorBird D2100E video intercom system | 6 | 160 cm | DoorBird | ? Colour of your choice



Product number 870-VAR-KSDB2100E-6-160

Product description

6-bell pedestal designer - stainless steel V2A powder-coated with DoorBird D2100E video intercom system

High-quality doorbell pillar for 6 parties made entirely of V2A stainless steel, powder-coated by Briefkasten Manufaktur. Integrated DoorBird IP Video Door Station D2100E. The DoorBird IP Video Door Station D2100E is the smart solution for your entrance door. The IP video door station can be operated as a stand-alone unit or integrated into an existing smart home platform. Existing, classic installations such as a door chime or an electric door and gate opener can also continue to be used with DoorBird and controlled via the app.

Our products have a high quality, reliable functionality and their own identity. Made by Briefkasten Manufaktur. The DoorBird was not only invented and developed in Germany, but is also still produced in Berlin today. At DoorBird, "Made in Germany" is not just a seal, but a philosophy that is lived and breathed. The IP video door stations are manufactured in the DoorBird factory to guarantee the highest quality, durability and customer satisfaction.

Briefkasten Manufaktur Lippe GmbH
Werler Straße 60
32105 Bad Salzuflen

www.briefkasten-manufaktur.de
info@briefkasten-manufaktur.de
Tel.: +49 5222 807110

Geschäftsführer Oliver Woineck
Ust.ID.Nr. DE303690847
Handelsregister Amtsgericht Lemgo, HRB 8618

- Doorbell pillar made of 1.5 mm stainless steel V2A 1.4301, powder-coated.
- The system is manufactured by Briefkasten Manufaktur. German quality production "Made in Germany".
- The speech part is made of 2 mm stainless steel V2A 1.4301, powder-coated. Dimensions: W 190 mm x H 640 mm x D 110 mm.
- House number approx. 70 mm high (max. 3 digits) with energy-saving LED lighting 12V DC approx. 50mA / 1W, white.
- Incl. 6x screw cover caps made of stainless steel V2A, polished so that the screws for fixing the front plate are not visible. See pictures.
- The fully welded pedestal is made of 1.5mm V2A stainless steel, powder-coated. Construction height is either 1.30 m or 1.60 m.
- The pedestal is equipped with a VA base plate. This is 10 mm thick and is finished with a cover plate. See pictures.
- Invisible cable feed possible through the body.
- Incl. DoorBird IP video door station D2100E installed.

Important information

Camera or intercom preparation

The intercom systems must be connected by an electrician. Please contact your trusted electrician for planning, fitting and installation.

Water protection

To achieve optimum water protection for your mail, the letterbox or letterbox system should be located under a canopy if possible.

The mail is only protected from water if it is fully inserted in the box and the flap is closed. Mail that is not fully inserted allows moisture and dirt to penetrate the letterbox. It is therefore necessary to plan sufficiently dimensioned letterboxes for the upcoming requirements. Under certain extreme weather conditions, water can still enter (up to 1ccm according to DIN EN 13724). This is not a reason for complaint.

Product properties

Surface/colour	RAL 9005 deep black, RAL 3004 crimson red, DB 703 iron mica, RAL 7016 anthracite grey, RAL of your choice (according to colour table), RAL 9007 grey aluminium, RAL 9016 traffic white
Series	GRIMM
Connection technology	LAN
Number of bell push buttons	6 buttons
Functions	Camera, Intercom, Fingerprint, Keypad
Functional box prepared for manufacturer	DoorBird
Mounting type	Free-standing
Material	Stainless steel V2A 1.4301
House number	House number as laser engraving, House number as laser cut, illuminated

Briefkasten Manufaktur Lippe GmbH
Werler Straße 60
32105 Bad Salzuflen

www.briefkasten-manufaktur.de
info@briefkasten-manufaktur.de
Tel.: +49 5222 807110

Geschäftsführer Oliver Woineck
Ust.ID.Nr. DE303690847
Handelsregister Amtsgericht Lemgo, HRB 8618

Dimensions

Height of single box in mm	640,0
Width of single box in mm	190,0
Overall height in mm	1300,0 | 1600,0
Total width in mm	220.0 (foot plate 320.0)
Depth in mm	110.0 (foot plate 210.0)
Weight in kg	40
Delivery condition	Delivery is assembled

Dimension drawing

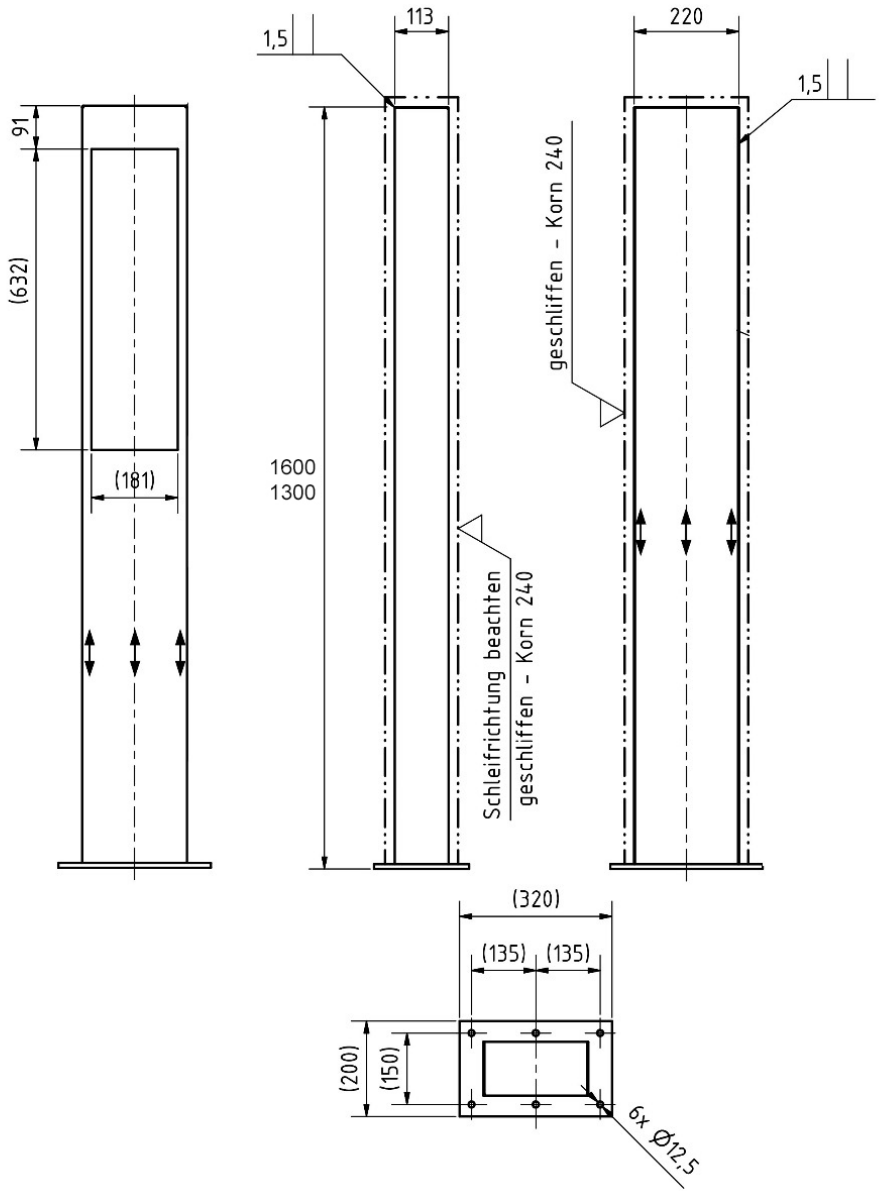

More images

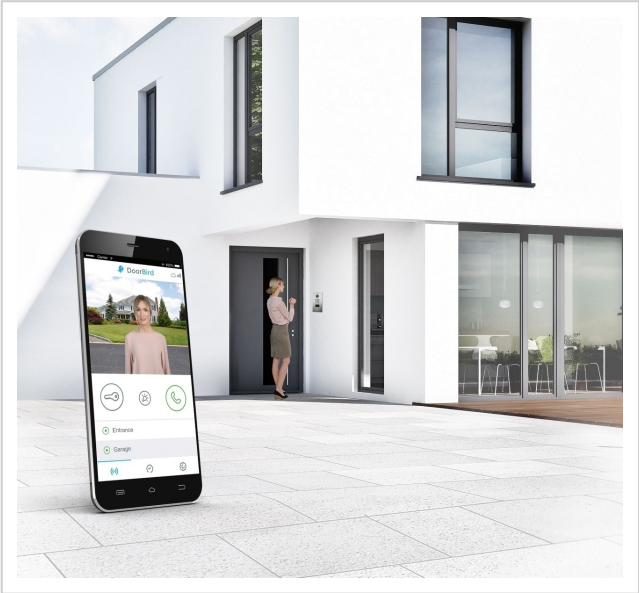





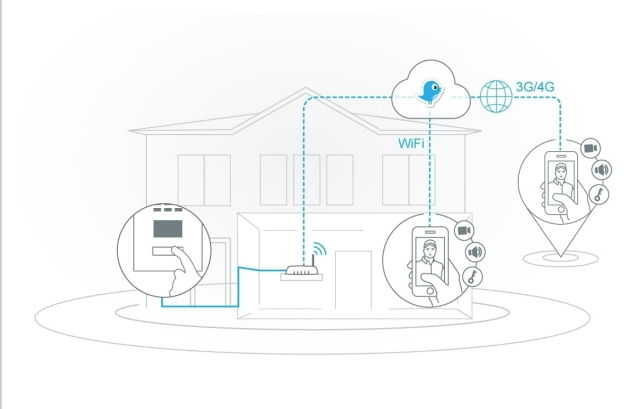

Briefkasten Manufaktur Lippe GmbH
Werler Straße 60
32105 Bad Salzuflen

www.briefkasten-manufaktur.de
info@briefkasten-manufaktur.de
Tel.: +49 5222 807110

Geschäftsführer Oliver Woineck
Ust.ID.Nr. DE303690847
Handelsregister Amtsgericht Lemgo, HRB 8618

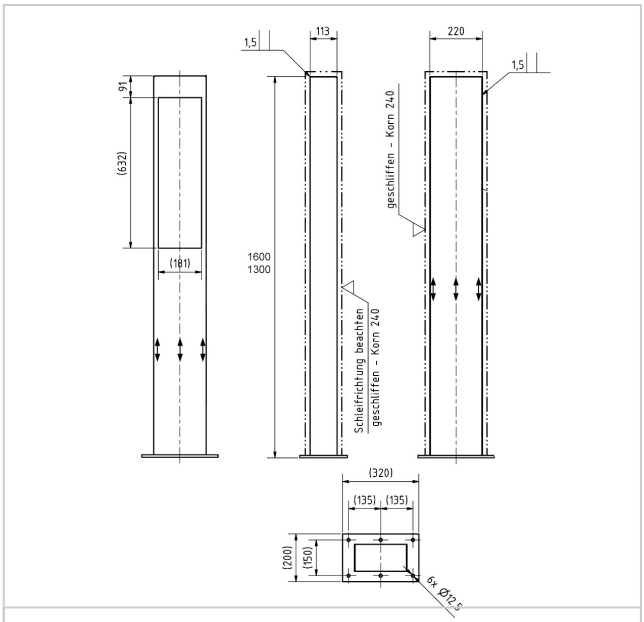





Briefkasten Manufaktur Lippe GmbH
Werler Straße 60
32105 Bad Salzuflen

www.briefkasten-manufaktur.de
info@briefkasten-manufaktur.de
Tel.: +49 5222 807110

Geschäftsführer Oliver Woineck
Ust.ID.Nr. DE303690847
Handelsregister Amtsgericht Lemgo, HRB 8618