4-unit BASIC letterbox system with 4 parcel compartments and LED lighting – choice of RAL colour

Product number BML3D-WHXMEMDZQ9



Product description

Freestanding stainless steel letterbox system for four households, with parcel compartments in your choice of RAL colour

The BASIC Horizontal from Briefkasten Manufaktur combines four letterboxes with four separately lockable parcel compartments and a functional module. The freestanding column brings mail and parcel deliveries together in one system.

Made from V2A 1.4301 stainless steel, the system is powder-coated in your choice of RAL colour. Close-fitting cladding, a flat rain canopy and a rear panel complete the structure.

Features of this letterbox system

Briefkasten Manufaktur Lippe GmbH
Werler Straße 60
32105 Bad Salzuflen

www.briefkasten-manufaktur.de
info@briefkasten-manufaktur.de
Tel.: +49 5222 807110

Geschäftsführer Oliver Woineck
Ust.ID.Nr. DE303690847
Handelsregister Amtsgericht Lemgo, HRB 8618

- Overall external dimensions of the system: 754 × 1252 × 430 mm (W × H × D).
- 4 horizontal letterboxes, each with external box dimensions of 370 × 110 × 385 mm (W × H × D); mail retrieval from the front.
- 4 accessory boxes used as parcel compartments, each with external box dimensions of 370 × 440 × 385 mm (W × H × D), each fitted with a door and a BASIC series parcel lock with T-handle.
- 1 functional module with external box dimensions of 740 × 110 × 385 mm (W × H × D) and a front panel secured with locking screws.
- Freestanding installation as a column with a plinth frame and internal base plate; secured with screws.
- Base material: V2A 1.4301 stainless steel; powder-coated finish in your choice of RAL colour.
- Close-fitting cladding made from 1,5 mm stainless steel, with two side panels, a flat rain canopy and a 1 mm thick rear panel.
- Letterboxes with a rainwater run-off edge, a continuous rubber lip at the letter slot and a cam lock with a stainless steel protective flap.
- 4 BASIC Type 2 plastic nameplates and laser-cut lettering with white backlighting.

Special features of this letterbox system

Four parcel compartments with mechanical release

Each of the four parcel compartments is fitted with a BASIC series parcel lock with T-handle. Use your key to release the relevant compartment for a single opening. The delivery driver can open the released compartment without a key, place the parcel inside and, after closing the door, push in the lock to secure it.

To retrieve your parcel, open the compartment with your key. The compartment must be released again before another keyless delivery can be made. Each parcel lock comes with two keys and has its own individual key number.

The stated box dimensions are external dimensions, not maximum parcel dimensions. The clear door opening and usable internal dimensions of each compartment determine the size of parcel it can accommodate.

Letterboxes with protected cam locks

Each of the four letterboxes has a cam lock with a stainless steel protective flap and two keys. The protective flap shields the lock cylinder from liquids and dirt particles.

The continuous rubber lip cushions the letter flap. The letter slot is designed for DIN-C4 envelopes; the slot height and tapered chute make unauthorised access to the mail more difficult.

Nameplates and backlit lettering

The four BASIC Type 2 nameplates are made from crystal-clear polycarbonate. You can replace their inserts from the front.

The selected configuration also includes four laser-engraved inscriptions and twelve laser-cut inscriptions with white backlighting.

Functional module with screw-secured front panel

The functional module, made from V2A 1.4301 stainless steel, has an integrated rainwater run-off edge. Its front panel is secured with locking screws. Bell pushes, a camera and an intercom are not included in this configuration.

Individually configurable

Create a letterbox system to suit your home: select “Configure now” to adapt this configuration to your requirements.

Briefkasten Manufaktur Lippe GmbH
Werler Straße 60
32105 Bad Salzuflen

www.briefkasten-manufaktur.de
info@briefkasten-manufaktur.de
Tel.: +49 5222 807110

Geschäftsführer Oliver Woineck
Ust.ID.Nr. DE303690847
Handelsregister Amtsgericht Lemgo, HRB 8618

- Support posts in a suitable length: choose the post length offered for your installation requirements. You can change the length shown.
- Box finish: customise the colour in the 3D configurator using the colours available for this version.
- Personalised lettering: customise the designated areas with your own names, house numbers or chosen text. The lettering shown is for illustration and can be replaced.
- Lettering style: choose from the fonts available for lettering and adjust the appearance in the configurator.
- Backlit lettering can be configured on the designated areas of this system.
- Equipment: add or change compatible components from the selection available for this system.

When you make individual changes, the dimensions and price are recalculated in the 3D configurator to reflect your selection.

Important information

Water protection: a sheltered location, ideally under a canopy, helps protect your mail. Mail should be fully inserted and the letter flap closed.

Installation: the selected system requires a suitable load-bearing base. Follow the installation instructions and take account of the configured fixing method.

Product properties

Series	BASIC
Functions	Parcel compartment
Number of boxes	with 4 parcel boxes, with 4 letterboxes
Name labelling	Nameplate
Mounting type	Free-standing
Material	Stainless steel V2A 1.4301
Removal of mail	On the front
Surface/colour	RAL of your choice (according to colour table)

Briefkasten Manufaktur Lippe GmbH
Werler Straße 60
32105 Bad Salzuflen

www.briefkasten-manufaktur.de
info@briefkasten-manufaktur.de
Tel.: +49 5222 807110

Geschäftsführer Oliver Woineck
Ust.ID.Nr. DE303690847
Handelsregister Amtsgericht Lemgo, HRB 8618

Dimensions

Height of single box in mm	110
Width of single box in mm	370
Overall height in mm	1252
Total width in mm	754
Depth in mm	430

Dimension drawing

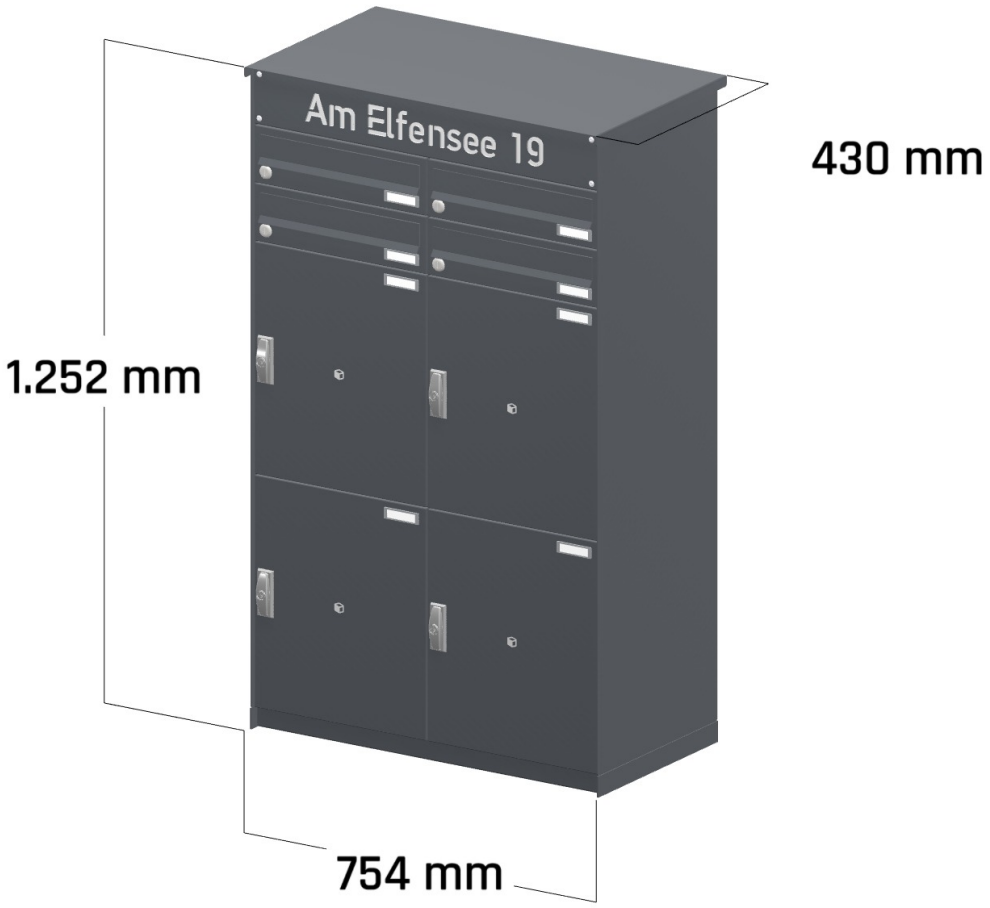

Briefkasten Manufaktur Lippe GmbH
Werler Straße 60
32105 Bad Salzuflen

www.briefkasten-manufaktur.de
info@briefkasten-manufaktur.de
Tel.: +49 5222 807110

Geschäftsführer Oliver Woineck
Ust.ID.Nr. DE303690847
Handelsregister Amtsgericht Lemgo, HRB 8618

More images

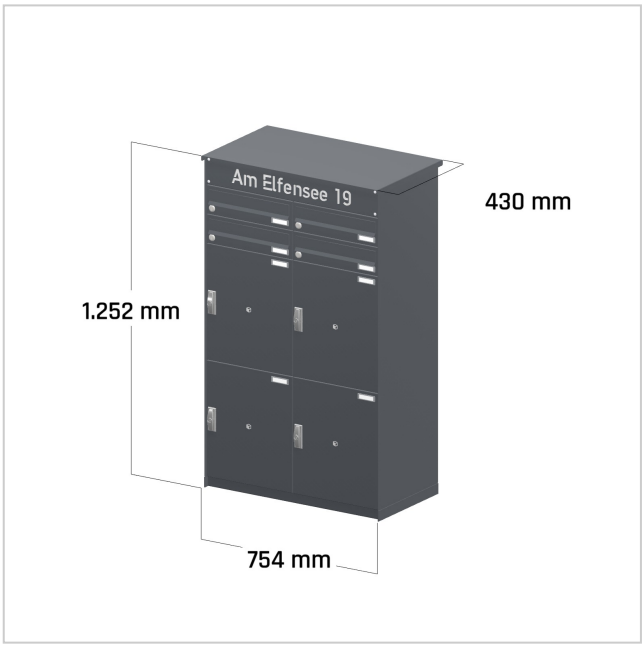

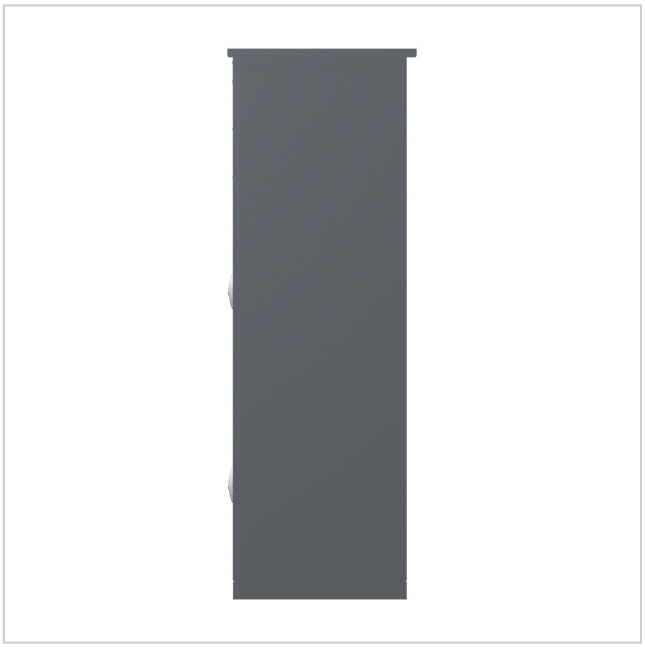





Briefkasten Manufaktur Lippe GmbH
Werler Straße 60
32105 Bad Salzuflen

www.briefkasten-manufaktur.de
info@briefkasten-manufaktur.de
Tel.: +49 5222 807110

Geschäftsführer Oliver Woineck
Ust.ID.Nr. DE303690847
Handelsregister Amtsgericht Lemgo, HRB 8618