2-unit 2x1 flush-mounted mailbox system BASIC - Edition NELLY - Bi-colour VA-RAL 7016 anthracite grey | with 2 letterboxes (2x1)

Product number 382U-7016VA-BS-2X1



Product description

2-unit flush-mounted letterbox system BASIC – Edition NELLY – 2 × 1 – BI-Color stainless steel / RAL 7016 anthracite grey

"Everything begins with longing." – Nelly Sachs

Edition NELLY combines the proven BASIC letterbox engineering with a distinctly more individual appearance. The letterbox body is made of galvanised steel and is powder-coated in RAL 7016 anthracite grey fine-textured matt, while the inlet flaps are stainless steel V2A 1.4301 with a 240-grit brushed finish. This deliberate BI-Color contrast appears modern and premium and can be combined with many front doors, windows and façades. As a flush-mounted version with 2 letterboxes (2 × 1), NELLY is intended not only for mail reception but as a neatly designed element of the entrance area. The powder-coated render cover frame provides a clear finish to the façade; its upper area becomes the characteristic NELLY labelling surface.

The key advantages of Edition NELLY

Labelling frame as part of the façade

In the flush-mounted version, individualisation is integrated directly into the architecture: the upper area of the render cover frame serves as a labelling surface for the house number and/or street name. This avoids an additional nameplate solution and creates a calm, integrated NELLY look.

BI-Color: RAL 7016 meets brushed stainless steel

The letterbox body is galvanised steel powder-coated in RAL 7016 anthracite grey fine-textured matt. The inlet flaps, by contrast, are stainless steel V2A 1.4301 with a 240-grit brushed finish. The stainless steel render cover frame is powder-coated and sets the anthracite-grey body cleanly against the façade.

Briefkasten Manufaktur Lippe GmbH
Werler Straße 60
32105 Bad Salzuflen

www.briefkasten-manufaktur.de
info@briefkasten-manufaktur.de
Tel.: +49 5222 807110

Geschäftsführer Oliver Woineck
Ust.ID.Nr. DE303690847
Handelsregister Amtsgericht Lemgo, HRB 8618

Large mail slot for DIN C4

The 35 × 325 mm inlet opening is designed for DIN C4 in landscape format. Even larger letters can be inserted without folding. The letterbox version complies with DIN EN 13724.

Quiet operation for everyday use

The brushed stainless steel inlet flaps are fitted with a noise-damping rubber seal. A mail retention bracket supports controlled removal, while the doors open from left to right.

Solid render cover frame 25 × 58 mm

The render cover frame consists of a 25 × 58 mm stainless steel angle profile made from 1.5 mm thick V2A 1.4301. Powder-coated in an RAL colour, it forms a clear, robust finish between the letterbox system and the façade.

Equipment and technical features

Materials and letterbox

Configuration 2 letterboxes (2 × 1)
Letterbox body Steel, galvanised; RAL 7016 anthracite grey fine-textured matt
Inlet flaps Stainless steel V2A 1.4301, 240-grit brushed finish
Inlet opening 35 × 325 mm, DIN C4 landscape
Standard DIN EN 13724

NELLY design and operation

Labelling Custom laser engraving in BML Lasercut lettering
Nameplate Interchangeable nameplate beneath the inlet flap
Mail retention bracket Integrated per letterbox
Mail retrieval Front access
Door opening From left to right
Locking system Depending on the selected product configuration

Installation and construction

Mounting type Flush-mounted
Render cover frame Stainless steel angle profile 25 × 58 mm made from 1.5 mm stainless steel V2A 1.4301, powder-coated
Labelling area Upper render cover frame with custom laser engraving
Rain drainage edge Integrated into the construction
Manufacture Made in Germany by Briefkasten Manufaktur Lippe

Note on weather protection

Mail items are best protected against moisture and soiling when fully inserted and with the inlet flap closed. Protruding items may prevent the flap from closing completely.

Note on flush-mounted installation

Briefkasten Manufaktur Lippe GmbH
Werler Straße 60
32105 Bad Salzuflen

www.briefkasten-manufaktur.de
info@briefkasten-manufaktur.de
Tel.: +49 5222 807110

Geschäftsführer Oliver Woineck
Ust.ID.Nr. DE303690847
Handelsregister Amtsgericht Lemgo, HRB 8618

The flush-mounted installation should be carried out professionally into the intended wall structure. When installing in insulated external walls, particular attention must be paid to sealing and possible thermal bridges.

Product properties

Material	Steel, galvanised, Stainless steel V2A 1.4301
Series	BASIC
Boxes by volume	Normal > 10 litres
Name labelling	Nameplate
House number	House number as laser engraving
Surface/colour	RAL 7016 anthracite grey, Brushed
Number of boxes	with 2 letterboxes
Removal of mail	On the front
Mounting type	Flush-mounted

Briefkasten Manufaktur Lippe GmbH
Werler Straße 60
32105 Bad Salzuflen

www.briefkasten-manufaktur.de
info@briefkasten-manufaktur.de
Tel.: +49 5222 807110

Geschäftsführer Oliver Woineck
Ust.ID.Nr. DE303690847
Handelsregister Amtsgericht Lemgo, HRB 8618

Dimensions

Height of single box in mm	330.0
Width of single box in mm	355.0
Capacity in litres	12.0
Height of letterbox slot in mm	35.0
Width of letter slot in mm	325.0
Height of letterbox in mm	380.0
Width of letterbox system in mm	763.0
Total width in mm	763.0
Depth in mm	100.0
Weight in kg	14
Delivery condition	Delivered fully assembled.

Briefkasten Manufaktur Lippe GmbH
Werler Straße 60
32105 Bad Salzuflen

www.briefkasten-manufaktur.de
info@briefkasten-manufaktur.de
Tel.: +49 5222 807110

Geschäftsführer Oliver Woineck
Ust.ID.Nr. DE303690847
Handelsregister Amtsgericht Lemgo, HRB 8618

Dimension drawing

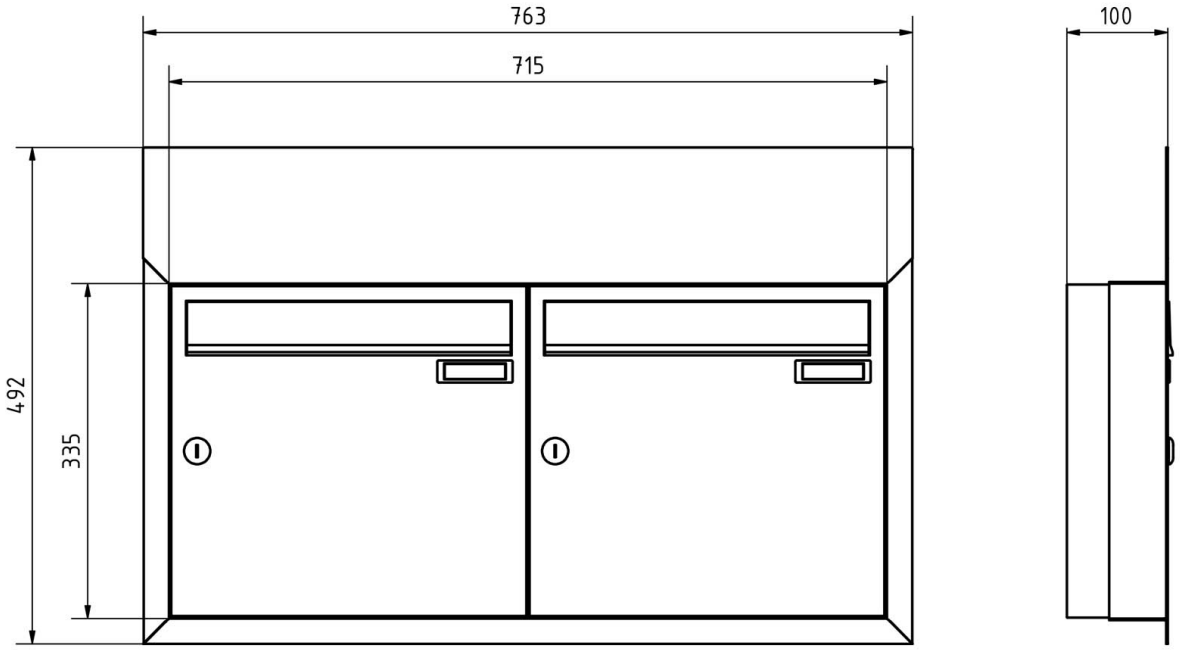

Briefkasten Manufaktur Lippe GmbH
Werler Straße 60
32105 Bad Salzuflen

www.briefkasten-manufaktur.de
info@briefkasten-manufaktur.de
Tel.: +49 5222 807110

Geschäftsführer Oliver Woineck
Ust.ID.Nr. DE303690847
Handelsregister Amtsgericht Lemgo, HRB 8618

More images



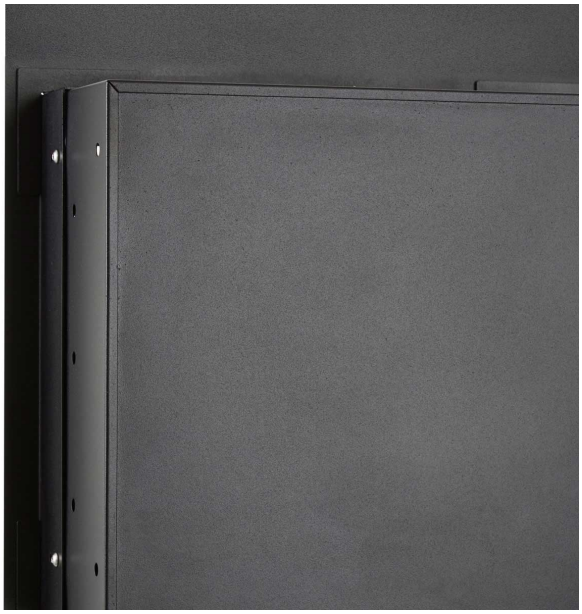

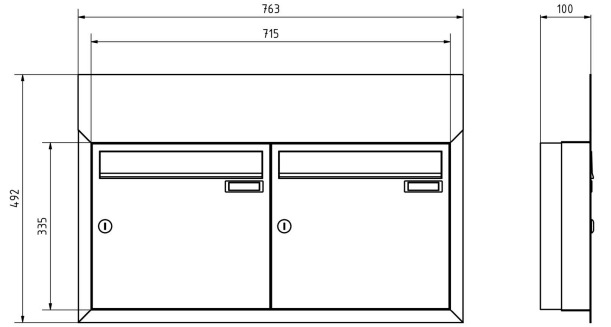





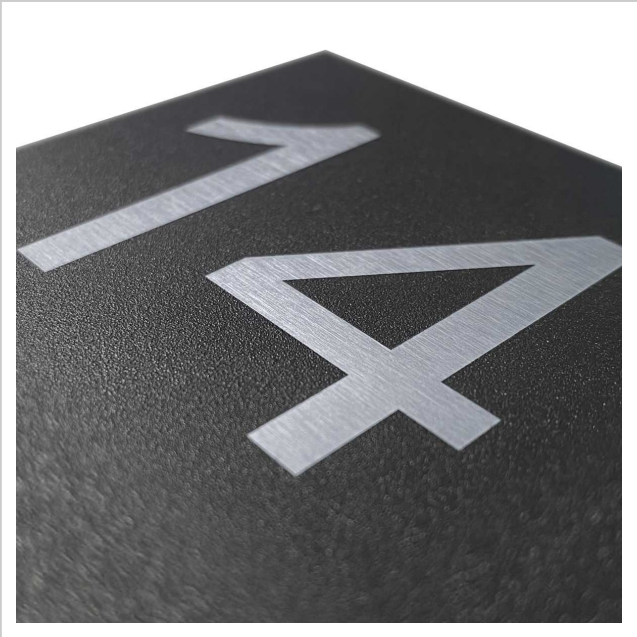

Briefkasten Manufaktur Lippe GmbH
Werler Straße 60
32105 Bad Salzuflen

www.briefkasten-manufaktur.de
info@briefkasten-manufaktur.de
Tel.: +49 5222 807110

Geschäftsführer Oliver Woineck
Ust.ID.Nr. DE303690847
Handelsregister Amtsgericht Lemgo, HRB 8618