GOETHE 4-mailbox system with 4 newspaper and storage compartments – flush mounting – choice of RAL colour

Product number BML3D-C59VH4HDY2



Product description

GOETHE for four households with newspaper and storage compartments to Swiss postal standards

This mailbox system from the GOETHE series combines four mailboxes with four separate newspaper and storage compartments to Swiss postal standards. The flush-mounted version features a plaster trim frame for a neat finish against the wall surface.

The stainless steel system is supplied with a powder coating in your choice of RAL colour. Mail is retrieved from the front, and the four mailboxes are operated using mechanical Push-Key locks. Each mailbox has two nameplates.

Features of this mailbox system

- Overall external dimensions of the system (W × H × D): 854 × 854 × 411 mm.
- Configuration: 4 mailboxes and 4 accessory boxes serving as newspaper and storage compartments to Swiss postal standards.
- External dimensions of each mailbox and newspaper and storage compartment (W × H × D): 400 × 200 × 400 mm; usable internal dimensions are not specified.
- Installation: flush mounting with a plaster trim frame made from 1,5 mm thick V2A 1.4301 stainless steel.
- Material: body made from 1.4016 stainless steel; front panels and frame made from V2A 1.4301 stainless steel.
- Finish: powder coating in your choice of RAL colour.
- Mailbox fittings: 4 keyed-to-differ Push-Key locks and a total of 8 BASIC Type 2 nameplates.

Special features of this mailbox system

Push-Key locks: open without turning the key

Briefkasten Manufaktur Lippe GmbH
Werler Straße 60
32105 Bad Salzuflen

www.briefkasten-manufaktur.de
info@briefkasten-manufaktur.de
Tel.: +49 5222 807110

Geschäftsführer Oliver Woineck
Ust.ID.Nr. DE303690847
Handelsregister Amtsgericht Lemgo, HRB 8618

Each of the four mailboxes is fitted with a purely mechanical Push-Key lock. To open it, simply insert the key; no turning is required. To close it, push the retrieval flap shut.

The locks are keyed to differ, each with its own individual key number. Two keys are supplied per lock.

Four separate newspaper and storage compartments

In addition to the mailboxes, there are four stainless steel newspaper and storage compartments. The compartments are accessible from the front and open upwards.

No locks have been selected for these compartments. The Push-Key locks are fitted exclusively to the four mailboxes.

Two nameplates per mailbox

Each mailbox has two BASIC Type 2 nameplates made from crystal-clear polycarbonate. The inserts can be changed from the front.

The selected nameplate option includes a “No advertising, thank you” insert. This allows you to display a notice against unwanted advertising deliveries alongside your name.

Damped letter flap and front mail retrieval

The mailboxes feature a damped letter flap, a continuous rubber lip and a rainwater run-off edge. The letter slot also accommodates DIN-C4 envelopes.

The arrangement of the lock and retrieval door helps prevent mail from falling out when opened. The letter slot height and tapered chute make unauthorised removal through the slot more difficult.

Plaster trim frame for a neat wall finish

The plaster trim frame covers the transition between the installation opening and the wall surface. It provides the finishing surround for the flush-mounted system and is not a rain canopy.

Individually configurable

Design your mailbox system to suit your home: select “Configure now” to adapt this configuration to your requirements.

- Box finish: customise the colour in the 3D configurator using the colours available for this version.
- Personalised lettering: add your own names, house numbers or preferred text to the designated areas. Any lettering shown is an example and can be replaced.
- Lettering style: choose from the fonts available for lettering and adjust the appearance in the configurator.
- Fittings: add or change compatible components from the selection available for the system.

When you make individual changes, the dimensions and price are recalculated in the 3D configurator to match your selection.

Important information

Water protection: a sheltered location, ideally under a canopy, helps protect your mail. Mail should be inserted fully and the letter flap kept closed.

Installation: check the mounting surface and installation conditions against the overall dimensions and installation instructions.

Briefkasten Manufaktur Lippe GmbH
Werler Straße 60
32105 Bad Salzuflen

www.briefkasten-manufaktur.de
info@briefkasten-manufaktur.de
Tel.: +49 5222 807110

Geschäftsführer Oliver Woineck
Ust.ID.Nr. DE303690847
Handelsregister Amtsgericht Lemgo, HRB 8618

Product properties

Series	GOETHE
Access control	Push-Key
Number of boxes	with 4 letterboxes
Name labelling	Nameplate
Material	Stainless steel V2A 1.4301, Stainless steel 1.4016 (non-rusting magnetic stainless steel)
Removal of mail	On the front
Surface/colour	RAL of your choice (according to colour table)
Mounting type	Flush-mounted

Briefkasten Manufaktur Lippe GmbH
Werler Straße 60
32105 Bad Salzuflen

www.briefkasten-manufaktur.de
info@briefkasten-manufaktur.de
Tel.: +49 5222 807110

Geschäftsführer Oliver Woineck
Ust.ID.Nr. DE303690847
Handelsregister Amtsgericht Lemgo, HRB 8618

Dimensions

Height of single box in mm	200
Width of single box in mm	400
Overall height in mm	854
Total width in mm	854
Depth in mm	411

Dimension drawing

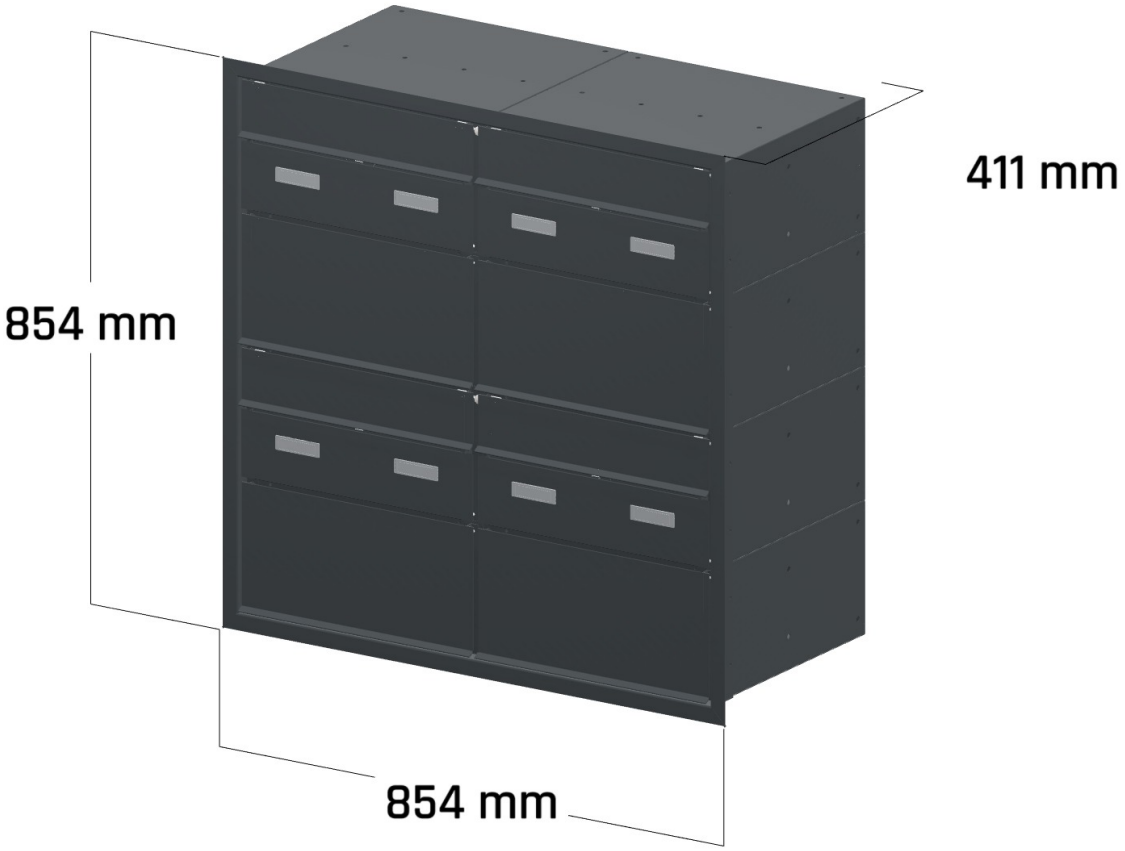

Briefkasten Manufaktur Lippe GmbH
Werler Straße 60
32105 Bad Salzuflen

www.briefkasten-manufaktur.de
info@briefkasten-manufaktur.de
Tel.: +49 5222 807110

Geschäftsführer Oliver Woineck
Ust.ID.Nr. DE303690847
Handelsregister Amtsgericht Lemgo, HRB 8618

More images





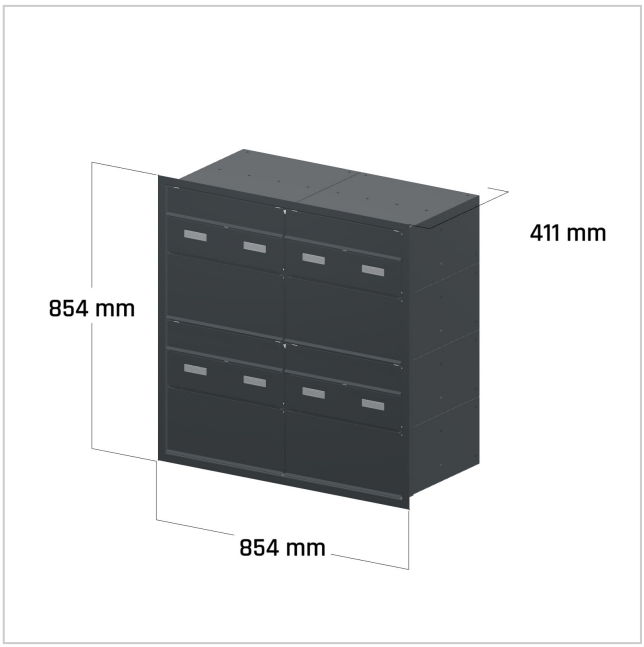



Briefkasten Manufaktur Lippe GmbH
Werler Straße 60
32105 Bad Salzuflen

www.briefkasten-manufaktur.de
info@briefkasten-manufaktur.de
Tel.: +49 5222 807110

Geschäftsführer Oliver Woineck
Ust.ID.Nr. DE303690847
Handelsregister Amtsgericht Lemgo, HRB 8618