Stainless steel letterbox BASIC 810 W for side wall mounting | without newspaper compartment | 100mm depth | Stainless steel, brushed

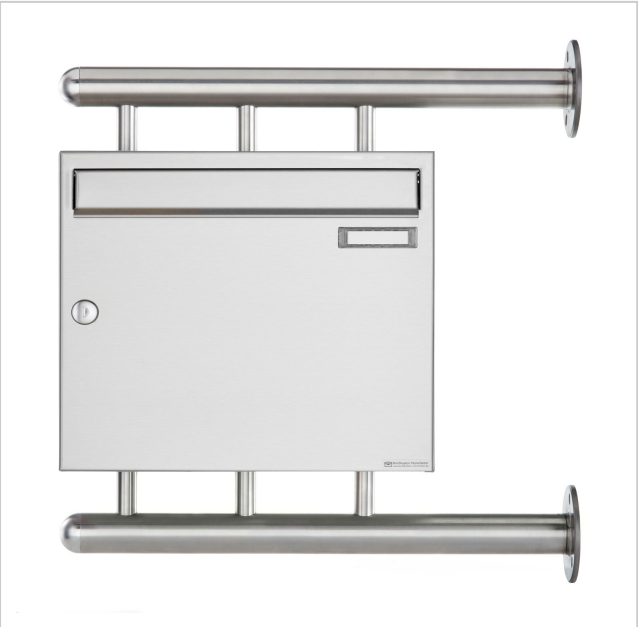

Product number 810-1-W-100

Product description

Stainless steel letterbox BASIC 810 W for side wall mounting

This letterbox combines the highest quality and modern design. The letterbox is made entirely of stainless steel V2 A 1.4301, polished. The polished finish is characterised by the highest level of elegance. Extremely high-quality workmanship and the well thought-out concept make this free-standing letterbox our top seller. A rain drainage edge for optimum water protection, a continuous rubber lip for quiet insertion and the very robust interchangeable nameplate characterise this letterbox.

Thanks to the design, self-assembly is straightforward.

The letterbox is manufactured by Briefkasten Manufaktur. 100% Made in Germany, Bad Salzuflen.

- Letterbox made of stainless steel V2A 1.4301, polished.
- The removal doors can be opened from left to right with rain drainage edge for optimum water protection.
- Insertion flap with sound-absorbing rubber seal for very quiet mail insertion.
- With interchangeable nameplate and 2 keys.
- The letterboxes comply with DIN EN 13724. Insertion size (3.5 cm x 32.5 cm) for DIN C4 landscape, large letters also fit in here without creasing.
- Incl. rain cover made of stainless steel V2A 1.4301, 240 grain polished.
- The mounting pillars are made of 42.4 mm stainless steel V2A 1.4301, polished for screw mounting on the house wall.

Important information:

The post is only protected against moisture and dirt when it is fully inserted and the flap is closed. Under certain extreme weather conditions, water can still enter (up to 1ccm according to DIN EN 13724). This is not a reason for complaint.

Briefkasten Manufaktur Lippe GmbH
Werler Straße 60
32105 Bad Salzuflen

www.briefkasten-manufaktur.de
info@briefkasten-manufaktur.de
Tel.: +49 5222 807110

Geschäftsführer Oliver Woineck
Ust.ID.Nr. DE303690847
Handelsregister Amtsgericht Lemgo, HRB 8618

Product properties

Series	BASIC
Boxes by volume	Normal > 10 litres
Name labelling	Nameplate
Material	Stainless steel V2A 1.4301
House number	House number as laser engraving
Removal of mail	On the front
Number of boxes	with 1 letterbox
Surface/colour	Brushed
Mounting type	Surface-mounted

Briefkasten Manufaktur Lippe GmbH
Werler Straße 60
32105 Bad Salzuflen

www.briefkasten-manufaktur.de
info@briefkasten-manufaktur.de
Tel.: +49 5222 807110

Geschäftsführer Oliver Woineck
Ust.ID.Nr. DE303690847
Handelsregister Amtsgericht Lemgo, HRB 8618

Dimensions

Height of single box in mm	330,0
Width of single box in mm	355,0
Capacity in litres	12,0 | 17,0
Height of letterbox slot in mm	35,0
Width of letter slot in mm	325,0
Height of letterbox in mm	330,0
Width of letterbox system in mm	355,0
Depth in mm	100,0 | 150,0
Weight in kg	12

Briefkasten Manufaktur Lippe GmbH
Werler Straße 60
32105 Bad Salzuflen

www.briefkasten-manufaktur.de
info@briefkasten-manufaktur.de
Tel.: +49 5222 807110

Geschäftsführer Oliver Woineck
Ust.ID.Nr. DE303690847
Handelsregister Amtsgericht Lemgo, HRB 8618

Dimension drawing

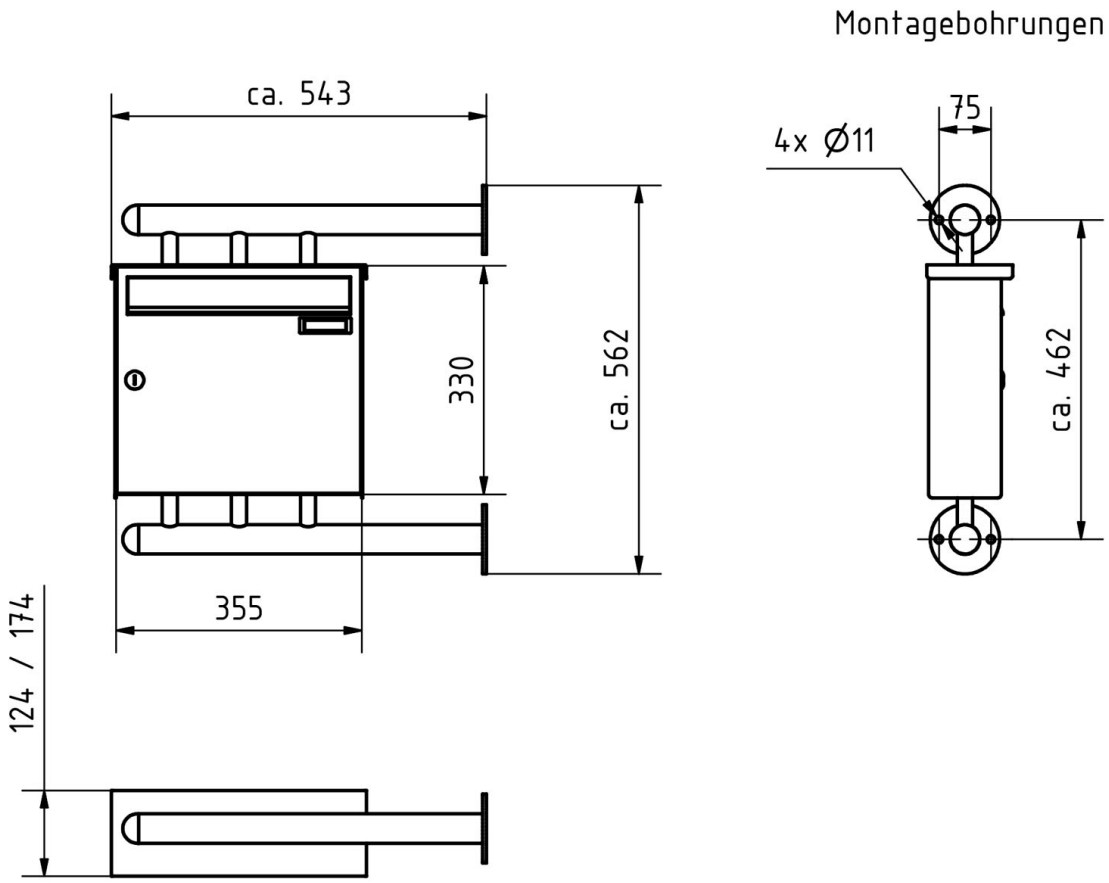

Briefkasten Manufaktur Lippe GmbH
Werler Straße 60
32105 Bad Salzuflen

www.briefkasten-manufaktur.de
info@briefkasten-manufaktur.de
Tel.: +49 5222 807110

Geschäftsführer Oliver Woineck
Ust.ID.Nr. DE303690847
Handelsregister Amtsgericht Lemgo, HRB 8618

More images

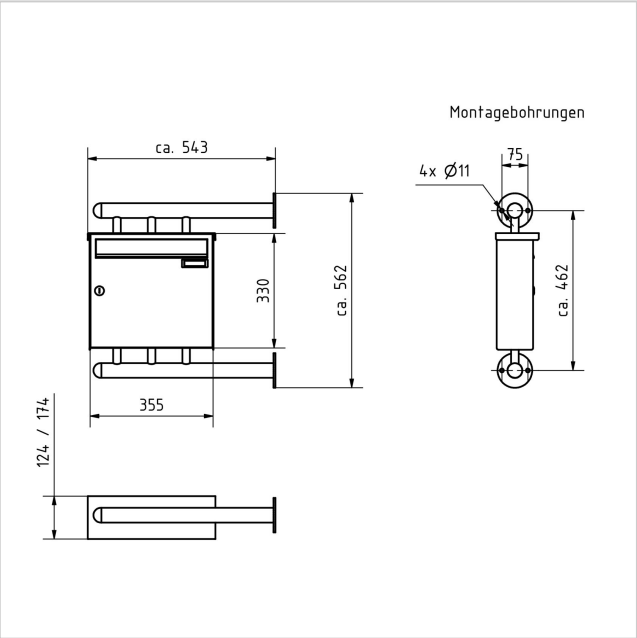







Briefkasten Manufaktur Lippe GmbH
Werler Straße 60
32105 Bad Salzuflen

www.briefkasten-manufaktur.de
info@briefkasten-manufaktur.de
Tel.: +49 5222 807110

Geschäftsführer Oliver Woineck
Ust.ID.Nr. DE303690847
Handelsregister Amtsgericht Lemgo, HRB 8618







Briefkasten Manufaktur Lippe GmbH
Werler Straße 60
32105 Bad Salzuflen

www.briefkasten-manufaktur.de
info@briefkasten-manufaktur.de
Tel.: +49 5222 807110

Geschäftsführer Oliver Woineck
Ust.ID.Nr. DE303690847
Handelsregister Amtsgericht Lemgo, HRB 8618