Letterbox KANT Edition with newspaper compartment - Design Elegance 6 - RAL 9016 traffic white | RAL 9016 Traffic White, fine-textured matt

Product number 303-E6-9016VA-AP



Product description

Mailbox KANT Edition with Newspaper Compartment - Design Elegance 6 - RAL 9016 Traffic White

The KANT Edition mailbox combines **elegant design** with functional comfort in one product. Its minimalist design with a concealed lock and a stylish labelling option fits seamlessly into modern residential environments. You can rely on **long-lasting quality** thanks to our excellent choice of materials and precise workmanship.

The generous capacity of approximately 12 litres and the top entry ensure crease-free post – including C4 envelopes and magazines. For added convenience, the mailbox is equipped with **high-quality axle dampers** that allow the entry flap to close smoothly and quietly. The newspaper compartment of this mailbox offers maximum functionality with accessibility from both sides, ideal for modern everyday use. A retrofit closure lid is included in the scope of delivery, giving you the option to reliably seal the weather-exposed side.

Thanks to its construction, self-installation is straightforward.

Briefkasten Manufaktur Lippe GmbH
Werler Straße 60
32105 Bad Salzuflen

www.briefkasten-manufaktur.de
info@briefkasten-manufaktur.de
Tel.: +49 5222 807110

Geschäftsführer Oliver Woineck
Ust.ID.Nr. DE303690847
Handelsregister Amtsgericht Lemgo, HRB 8618

- High-quality surface-mounted mailbox made of galvanized steel, powder-coated in RAL 9016 Traffic White, fine-textured matt.
- Design Elegance 6: stainless steel fascia and narrow stainless steel strip, brushed to 240 grit.
- The door opens from top to bottom.
- Top entry; entry flap fitted with high-quality axle dampers for silent closing.
- Includes 2 keys with key number.
- The mailbox complies with DIN/EN 13724. Entry aperture (3.5 cm x 33.5 cm) for C4 landscape; large envelopes fit without folding.
- Newspaper compartment (W x H 360 x 110 mm) made of galvanized steel, powder-coated in RAL 9016 Traffic White, fine-textured matt. Open on both sides (one closure lid included).
- Custom UV- and weather-resistant laser engraving.
- For surface-mounted wall installation; mounting screws included.

Important information:

To achieve optimal protection of your post from water, the mailbox or mailbox system should, where possible, be situated under a canopy.

Postal items are only protected from water if they are placed completely inside the box and the entry flap is closed. Post that is not fully inserted allows moisture and dirt to enter the mailbox. This unit is protected against ingress of water in accordance with DIN EN 13724. Water ingress is not a basis for a complaint.

Product properties

Material	Steel, galvanised, Stainless steel V2A 1.4301
Surface/colour	RAL 9005 deep black, Brushed
Series	KANT
Functions	Newspaper compartment
Boxes by volume	Normal > 10 litres
House number	House number as laser engraving
Name labelling	Laser-engraved
Removal of mail	On the front
Number of boxes	with 1 letterbox
Mounting type	Surface-mounted

Briefkasten Manufaktur Lippe GmbH
Werler Straße 60
32105 Bad Salzuflen

www.briefkasten-manufaktur.de
info@briefkasten-manufaktur.de
Tel.: +49 5222 807110

Geschäftsführer Oliver Woineck
Ust.ID.Nr. DE303690847
Handelsregister Amtsgericht Lemgo, HRB 8618

Dimensions

Height of single box in mm	BK 280.0 | ZF 110.0
Width of single box in mm	355.0
Capacity in litres	12
Height of letterbox slot in mm	35.0
Width of letter slot in mm	335.0
Height of letterbox in mm	412.0
Width of letterbox system in mm	372.0
Total width in mm	372.0
Depth in mm	110.0 + 21.0 faceplate
Weight in kg	6
Delivery condition	Delivered fully assembled.

Dimension drawing

Briefkasten Manufaktur Lippe GmbH
Werler Straße 60
32105 Bad Salzuflen

www.briefkasten-manufaktur.de
info@briefkasten-manufaktur.de
Tel.: +49 5222 807110

Geschäftsführer Oliver Woineck
Ust.ID.Nr. DE303690847
Handelsregister Amtsgericht Lemgo, HRB 8618

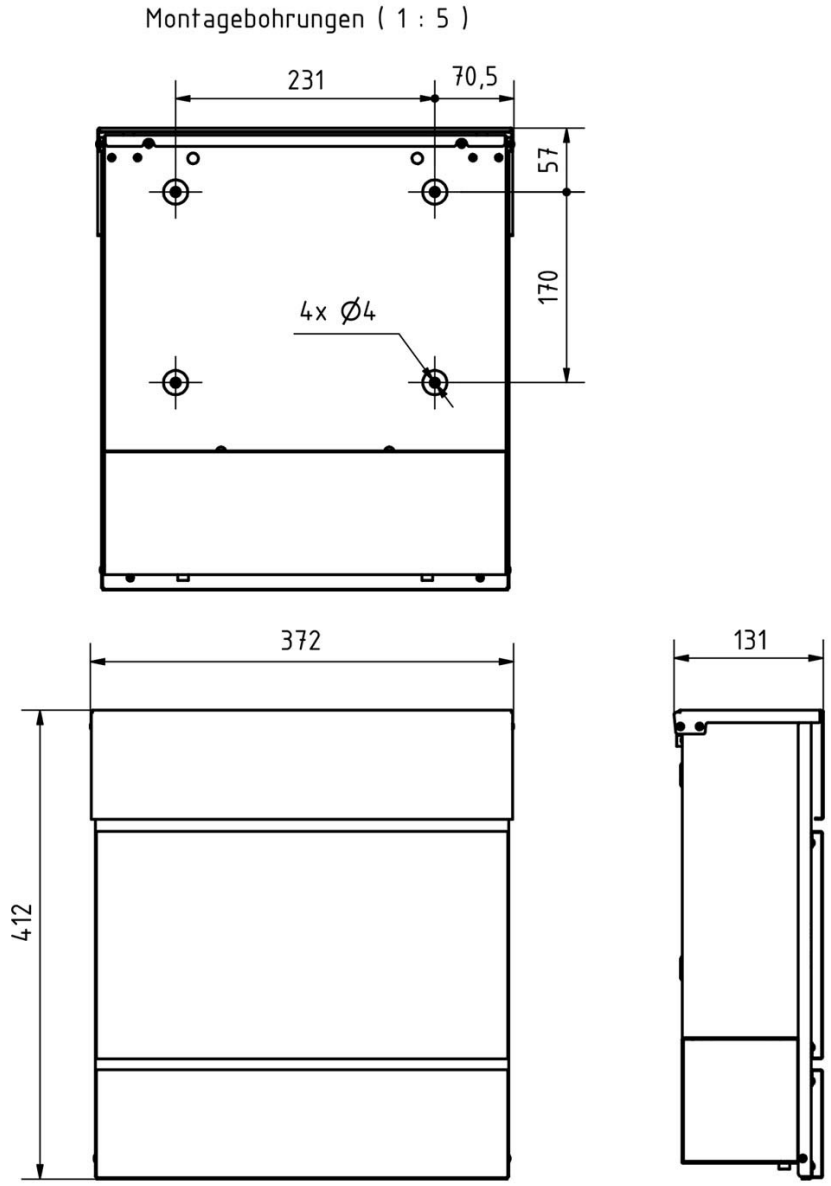

Briefkasten Manufaktur Lippe GmbH
Werler Straße 60
32105 Bad Salzuflen

www.briefkasten-manufaktur.de
info@briefkasten-manufaktur.de
Tel.: +49 5222 807110

Geschäftsführer Oliver Woineck
Ust.ID.Nr. DE303690847
Handelsregister Amtsgericht Lemgo, HRB 8618

More images


16


Marc Wöhner



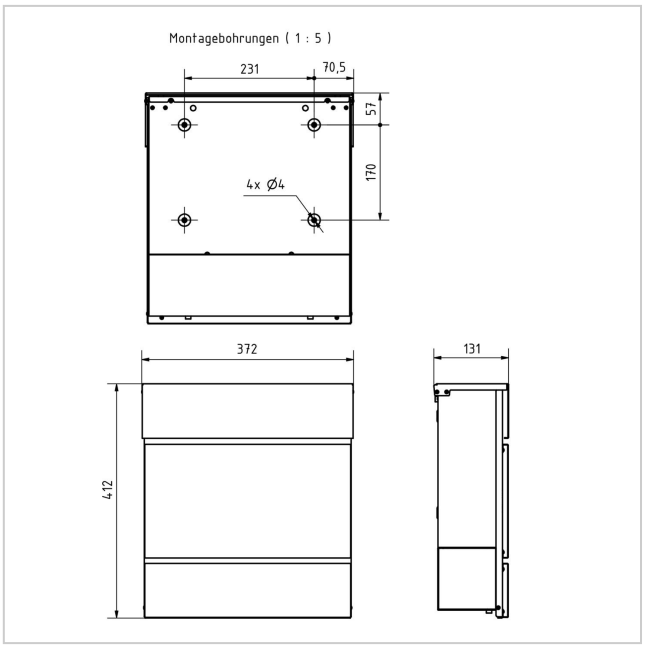
Montagebohrungen (1 : 5)
231
70,5
57
170
4x Ø4
372
131
412







Briefkasten Manufaktur Lippe GmbH
Werler Straße 60
32105 Bad Salzuflen

www.briefkasten-manufaktur.de
info@briefkasten-manufaktur.de
Tel.: +49 5222 807110

Geschäftsführer Oliver Woineck
Ust.ID.Nr. DE303690847
Handelsregister Amtsgericht Lemgo, HRB 8618