Single freestanding mailbox Design BASIC 385 ST-R with doorbell unit - stainless steel RAL 7016 anthracite grey | BI-Color brushed stainless steel | RAL 7016 anthracite grey | Top | with 1 mailbox



Product number 385-7016VA-1-SP

Product description

Freestanding mailbox BASIC 385 for 1 household with doorbell/intercom unit – BI-Colour stainless steel / RAL 7016

For single-family homes, offices and individual commercial units, the freestanding BASIC 385 as a system for 1 household offers a durable and clear entrance solution. The independent stand mounting allows the mailbox system to be positioned to suit the property and access situation.

The system configuration is matched to the respective number of households and, together with a rain canopy and side cladding, forms a closed unit.

The mailbox housings are made from galvanised steel in RAL 7016 Anthracite grey fine-textured matt. Brushed stainless steel inlet flaps (V2A) provide a high-quality BI-Colour accent. A close-fitting side cladding with rain canopy unites the individual mailboxes into a single, coherent installation.

Each mailbox compartment has an inlet of 35 × 265 mm for DIN C4 items in portrait orientation. A noise-damping rubber lip reduces impact noise, while the front-facing collection doors open from left to right. Each mailbox includes two keys with key number and an interchangeable name plate beneath the inlet flap.

The integrated doorbell/intercom unit combines bell function and preparation for an intercom directly within the mailbox system.

The advantages of the BASIC 385 at a glance

Solid stainless steel stand elements

Round-tube stand elements of approx. 60 mm diameter in brushed stainless steel V2A 1.4301 form a stable base for the freestanding mailbox system. The robust construction is designed for long-term use at the property entrance.

Briefkasten Manufaktur Lippe GmbH
Werler Straße 60
32105 Bad Salzuflen

www.briefkasten-manufaktur.de
info@briefkasten-manufaktur.de
Tel.: +49 5222 807110

Geschäftsführer Oliver Woineck
Ust.ID.Nr. DE303690847
Handelsregister Amtsgericht Lemgo, HRB 8618

Large inlet according to DIN EN 13724

The inlet opening of 35 × 265 mm is designed for DIN C4 items in portrait orientation. Larger envelopes can also be inserted without folding.

Quiet insertion and comfortable retrieval

A noise-damping rubber lip reduces the impact of the inlet flaps. Mail is collected from the front via doors that open from left to right.

BI-Colour of anthracite and stainless steel

Anthracite grey mailbox housings and brushed stainless steel inlet flaps create a clear material contrast with a premium appearance.

Doorbell/intercom unit integrated directly

The doorbell/intercom panel is integrated directly into the mailbox system.

Equipment of the BASIC 385 mailbox system

Mailbox system

Construction Product-specific system configuration
Number of mailboxes 1 separately usable mail compartment
Mailbox material Galvanised steel with stainless steel inlet flaps
Finish BI-Colour: RAL 7016 Anthracite grey fine-textured matt / stainless steel V2A brushed
Rain canopy / side cladding Galvanised steel, powder-coated in RAL 7016 Anthracite grey fine-textured matt
Manufacture Made in Germany by Briefkasten Manufaktur Lippe

Mail and operation

Inlet opening 35 × 265 mm, suitable for DIN C4 portrait
Inlet flaps With noise-damping rubber lip
Mail retrieval Front-facing
Door opening From left to right
Keys 2 keys with key number per mailbox
Name plate Interchangeable name plate beneath the inlet flap
Standard Mailboxes in accordance with DIN EN 13724

Stand elements and fittings

Stand elements Round tube approx. 60 mm from stainless steel V2A 1.4301, brushed
Mounting options Either for bolt fixing or for embedding in concrete
Fixings Anchor bolts for bolt fixing are not included; select suitable fixings separately to match the foundation
Doorbell / intercom unit Integrated function panel
Intercom preparation Speaker cut-out with universal adapter for common flush-fit loudspeakers
Doorbell push-button Round stainless steel push-button matching the product design

Mailbox size and volume

The BASIC 385 is available with different mailbox sizes depending on the product configuration. The standard version 300 × 110 × 385 mm offers approx. 12 litres volume; depending on the variant, 300 × 220 × 385 mm with approx. 25 litres volume is also available.

Mounting by setting in concrete

For the freestanding system we recommend a suitably dimensioned concrete foundation. When setting in concrete, the stainless steel stand elements must be aligned plumb and permanently anchored in the foundation. Foundation size and embedment depth must be adapted to ground conditions, system weight and local circumstances.

Bolt fixing to a foundation

For bolt fixing a flat, load-bearing concrete foundation is required. Suitable anchor bolts or fixings must be selected to suit the substrate and the system load. For the BASIC-385-ST-R versions, anchor bolts are not included in the standard delivery scope.

Note on weather protection

Mail items are best protected from moisture and dirt when fully inserted and with the inlet flap closed. Overlong items can prevent the flap from closing fully. In extreme weather conditions, moisture can enter the mailbox despite norm-compliant execution.

Note on doorbell and intercom technology

The doorbell/intercom unit is prepared with a speaker cut-out and universal adapter for common flush-fit loudspeakers. A two-way intercom system or flush loudspeaker are not part of the basic equipment. Planning, connection and commissioning of electrical components should be carried out by a qualified electrician.

Product properties

Material	Steel, galvanised, Stainless steel V2A 1.4301
Series	BASIC
Number of bell push buttons	1 button
Functions	Light button, Intercom
Functional box prepared for manufacturer	GIRA, Busch Jaeger, Siedle, STR Elektronik, ELCOM, TCS, Ritto, ALGO, Telegärtner, Auerswald, Legrand Bticino, Comelit
Boxes by volume	Normal > 10 litres
Name labelling	Nameplate
Mounting type	Free-standing
Surface/colour	RAL 7016 anthracite grey, Brushed
Removal of mail	On the front
Number of boxes	with 1 letterbox

Briefkasten Manufaktur Lippe GmbH
Werler Straße 60
32105 Bad Salzuflen

www.briefkasten-manufaktur.de
info@briefkasten-manufaktur.de
Tel.: +49 5222 807110

Geschäftsführer Oliver Woineck
Ust.ID.Nr. DE303690847
Handelsregister Amtsgericht Lemgo, HRB 8618

Dimensions

Height of single box in mm	110.0
Width of single box in mm	300.0
Capacity in litres	12
Height of letterbox slot in mm	35.0
Width of letter slot in mm	265.0
Height of letterbox in mm	220.0
Width of letterbox system in mm	300.0
Overall height in mm	1200.0 | 1500.0 | 1700.0
Total width in mm	465.0
Depth in mm	435.0
Weight in kg	16
Delivery condition	Delivery is made in blocks; stand elements/mailbox delivered separately.

Dimension drawing

Briefkasten Manufaktur Lippe GmbH
Werler Straße 60
32105 Bad Salzuflen

www.briefkasten-manufaktur.de
info@briefkasten-manufaktur.de
Tel.: +49 5222 807110

Geschäftsführer Oliver Woineck
Ust.ID.Nr. DE303690847
Handelsregister Amtsgericht Lemgo, HRB 8618

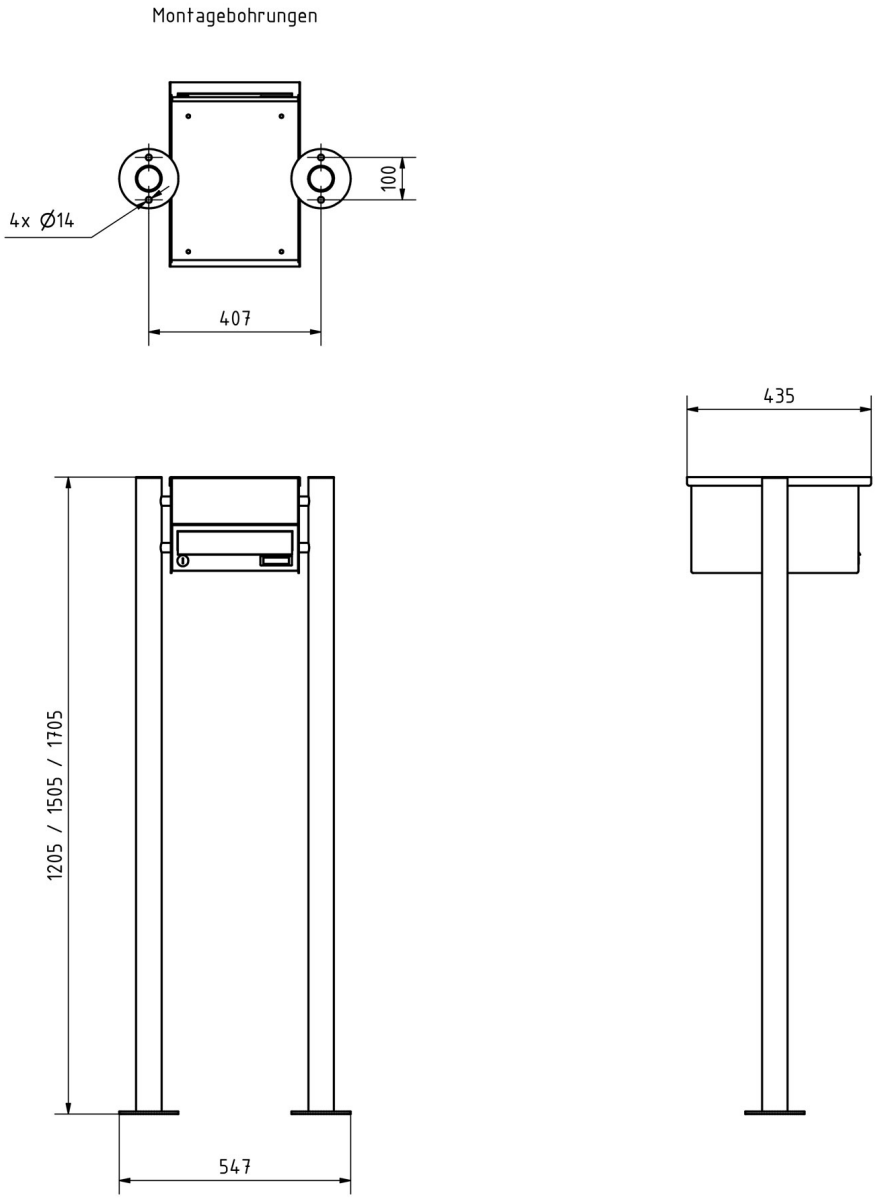

Briefkasten Manufaktur Lippe GmbH
Werler Straße 60
32105 Bad Salzuflen

www.briefkasten-manufaktur.de
info@briefkasten-manufaktur.de
Tel.: +49 5222 807110

Geschäftsführer Oliver Woineck
Ust.ID.Nr. DE303690847
Handelsregister Amtsgericht Lemgo, HRB 8618

More images

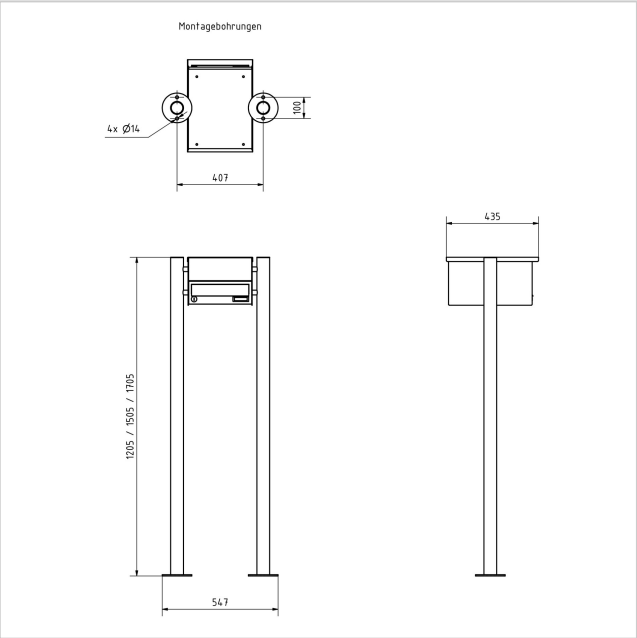







Briefkasten Manufaktur Lippe GmbH
Werler Straße 60
32105 Bad Salzuflen

www.briefkasten-manufaktur.de
info@briefkasten-manufaktur.de
Tel.: +49 5222 807110

Geschäftsführer Oliver Woineck
Ust.ID.Nr. DE303690847
Handelsregister Amtsgericht Lemgo, HRB 8618









Briefkasten Manufaktur Lippe GmbH
Werler Straße 60
32105 Bad Salzuflen

www.briefkasten-manufaktur.de
info@briefkasten-manufaktur.de
Tel.: +49 5222 807110

Geschäftsführer Oliver Woineck
Ust.ID.Nr. DE303690847
Handelsregister Amtsgericht Lemgo, HRB 8618





Briefkasten Manufaktur Lippe GmbH
Werler Straße 60
32105 Bad Salzuflen

www.briefkasten-manufaktur.de
info@briefkasten-manufaktur.de
Tel.: +49 5222 807110

Geschäftsführer Oliver Woineck
Ust.ID.Nr. DE303690847
Handelsregister Amtsgericht Lemgo, HRB 8618