7-unit 7x1 stainless steel freestanding mailbox system Design BASIC Plus 385X ST-R - RAL colour of your choice | 300x110x385 mm (WxHxD) - ?? Normal 12 litres | ? Colour of your choice | with 7 mailboxes



Product number 385XR-7S

Product description

Narrow freestanding mailbox system BASIC Plus 385X ST-R for 7 parties – colour of your choice

The BASIC Plus 385X ST-R freestanding mailbox system for 7 parties is a high-quality solution for larger apartment buildings, residential complexes and commercial properties. The narrower, more vertically organised arrangement reduces the horizontal footprint and is particularly suitable for property entrances with limited width.

The mailboxes are made of V2A stainless steel and are powder-coated in the selected RAL colour. The weather-resistant support posts are made of brushed V2A stainless steel 1.4301, providing a high-quality contrast and forming the stable freestanding substructure.

Each compartment offers a volume of approx. 12 litres. The 35 × 265 mm inlet is designed for DIN C4 mail in portrait orientation. A noise-damping rubber lip on the inlet flap, front mail retrieval and robust doors that open from left to right ensure practical everyday use.

The advantages of the BASIC Plus 385X ST-R system at a glance

Solid stainless steel support posts

Ø 60 mm support posts made of brushed V2A stainless steel 1.4301 provide a stable base for the freestanding mailbox system. The robust construction is designed for long-term use at the property entrance.

DIN C4 inlet and 12-litre volume

The 300 × 110 × 385 mm (W × H × D) mail compartments each provide approx. 12 litres of volume. The 35 × 265 mm inlet also accepts larger DIN C4 mail in portrait orientation.

Briefkasten Manufaktur Lippe GmbH
Werler Straße 60
32105 Bad Salzuflen

www.briefkasten-manufaktur.de
info@briefkasten-manufaktur.de
Tel.: +49 5222 807110

Geschäftsführer Oliver Woineck
Ust.ID.Nr. DE303690847
Handelsregister Amtsgericht Lemgo, HRB 8618

Quiet insertion and secure assignment

Rubber lips dampen the inlet flaps. Each compartment has a robust lock, two keys with key number and a protected interchangeable nameplate beneath the inlet flap.

Bolt-down installation or embedding in concrete

Depending on the version, the stainless steel support posts are either bolted to a load-bearing foundation or permanently cast into concrete. This allows the system to be installed to suit the site conditions.

BASIC Plus – colour of your choice

The powder-coated V2A mailboxes can be specified in a RAL colour to suit the architecture. Brushed stainless steel support posts, modular construction and German manufacturing complete the durable system.

Equipment of the BASIC Plus 385X ST-R mailbox system

Mailbox system

Number of mailboxes 7 individually lockable compartments
Single compartment 300 × 110 × 385 mm (W × H × D)
Volume Approx. 12 litres per compartment
Material V2A stainless steel, powder-coated in RAL colour of your choice
Inlet 35 × 265 mm, suitable for DIN C4 in portrait orientation
Standard Mailboxes compliant with DIN EN 13724

Mail and operation

Inlet flaps With noise-damping rubber lip
Mail retrieval Front
Door opening Opens from left to right
Keys 2 keys with key number per mailbox
Nameplate Interchangeable nameplate beneath the inlet flap
Cladding Tight-fitting side cladding and solid rain hood

Support posts and installation

Support posts Ø 60 mm V2A stainless steel 1.4301, brushed
Installation types Optional for bolted installation or for embedding in concrete
Overall height Depending on chosen support post version
Base material Consistent use of V2A stainless steel
Construction Modular and installation-friendly design
Manufacture Made in Germany by Briefkasten Manufaktur Lippe

Installation of the freestanding system

For bolted installation a level, sufficiently load-bearing foundation is required. For the version to be embedded in concrete, the support posts must be anchored plumb and permanently in a suitably dimensioned concrete foundation. Fixings and foundation must be matched to the system weight, ground conditions and local circumstances.

Briefkasten Manufaktur Lippe GmbH
Werler Straße 60
32105 Bad Salzuflen

www.briefkasten-manufaktur.de
info@briefkasten-manufaktur.de
Tel.: +49 5222 807110

Geschäftsführer Oliver Woineck
Ust.ID.Nr. DE303690847
Handelsregister Amtsgericht Lemgo, HRB 8618

Note on weather protection

Mail is only optimally protected from moisture and dirt when items are fully inserted and the inlet flaps are closed. Overhanging letters or magazines may prevent the flaps from closing completely.

BASIC Plus construction and spare parts

The BASIC Plus series is modular and installation-friendly. The consistent use of V2A stainless steel supports a long service life; spare parts for BASIC Plus systems are readily available.

Product properties

Surface/colour	RAL 9005 deep black, RAL 3004 crimson red, DB 703 iron mica, RAL 7016 anthracite grey, RAL of your choice (according to colour table), Brushed, RAL 9007 grey aluminium, RAL 9016 traffic white
Series	BASIC
Boxes by volume	Normal > 10 litres
Name labelling	Nameplate
Mounting type	Free-standing
Material	Stainless steel V2A 1.4301
Number of boxes	with 7 letterboxes
Removal of mail	On the front

Briefkasten Manufaktur Lippe GmbH
Werler Straße 60
32105 Bad Salzuflen

www.briefkasten-manufaktur.de
info@briefkasten-manufaktur.de
Tel.: +49 5222 807110

Geschäftsführer Oliver Woineck
Ust.ID.Nr. DE303690847
Handelsregister Amtsgericht Lemgo, HRB 8618

Dimensions

Height of single box in mm	110.0
Width of single box in mm	300.0
Capacity in litres	12
Height of letterbox slot in mm	35.0
Width of letter slot in mm	265.0
Height of letterbox in mm	770.0
Width of letterbox system in mm	300.0
Overall height in mm	1500.0 | 1700.0
Total width in mm	465.0
Depth in mm	435.0
Weight in kg	41
Delivery condition	Delivery is in blocks; freestanding elements / mailbox are delivered in separate parts.

Briefkasten Manufaktur Lippe GmbH
Werler Straße 60
32105 Bad Salzuflen

www.briefkasten-manufaktur.de
info@briefkasten-manufaktur.de
Tel.: +49 5222 807110

Geschäftsführer Oliver Woineck
Ust.ID.Nr. DE303690847
Handelsregister Amtsgericht Lemgo, HRB 8618

Dimension drawing

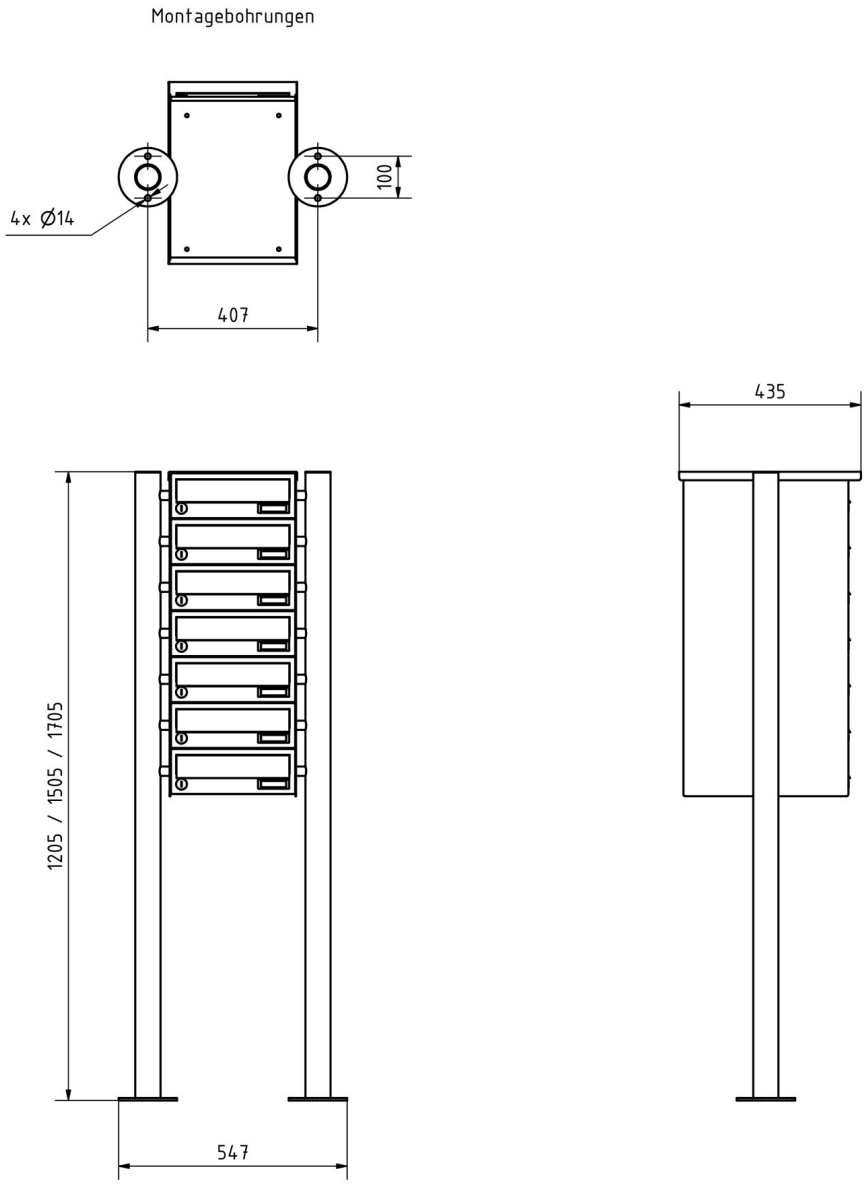

Briefkasten Manufaktur Lippe GmbH
Werler Straße 60
32105 Bad Salzuflen

www.briefkasten-manufaktur.de
info@briefkasten-manufaktur.de
Tel.: +49 5222 807110

Geschäftsführer Oliver Woineck
Ust.ID.Nr. DE303690847
Handelsregister Amtsgericht Lemgo, HRB 8618

More images





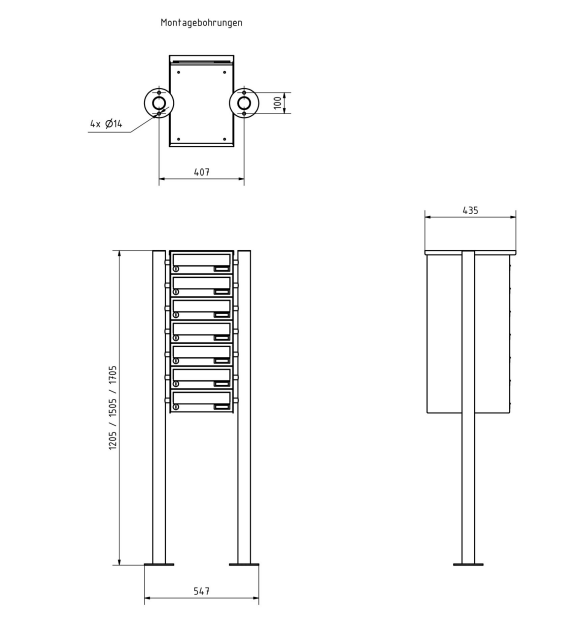



Briefkasten Manufaktur Lippe GmbH
Werler Straße 60
32105 Bad Salzuflen

www.briefkasten-manufaktur.de
info@briefkasten-manufaktur.de
Tel.: +49 5222 807110

Geschäftsführer Oliver Woineck
Ust.ID.Nr. DE303690847
Handelsregister Amtsgericht Lemgo, HRB 8618





Briefkasten Manufaktur Lippe GmbH
Werler Straße 60
32105 Bad Salzuflen

www.briefkasten-manufaktur.de
info@briefkasten-manufaktur.de
Tel.: +49 5222 807110

Geschäftsführer Oliver Woineck
Ust.ID.Nr. DE303690847
Handelsregister Amtsgericht Lemgo, HRB 8618