13-unit 5x3 freestanding stainless steel mailbox system Design BASIC Plus 385XP ST-T - RAL colour of your choice | with 13 mailboxes (3x5) | 300x110x385 mm (WxHxD) - ?? Normal 12 litres | ? Colour of your choice



Product number 385XP-13

Product description

Freestanding stainless steel mailbox system BASIC Plus 385XP ST-T for 13 households

The freestanding BASIC Plus 385XP ST-T mailbox system for 13 households is an especially sturdy entrance solution for larger residential complexes, multi-occupancy properties and commercially used buildings. 13 separately usable mail compartments are combined into a clearly structured, durable overall system.

The mailboxes are made of V2A stainless steel and are high-quality powder-coated in a RAL colour of choice. Particularly noteworthy are the solid stand elements made from anodised aluminium profile: these are also powder-coated, constructed for great stability and form an exceptionally robust base for the entire mailbox system. Stainless steel and solid aluminium combine durability with a clear, high-quality architectural appearance.

Each compartment measures 300 × 110 × 385 mm (W × H × D) and offers approx. 12 litres of volume. The 35 × 265 mm insertion opening is designed for DIN C4 items in portrait orientation. A noise-damping rubber lip on the insertion flap, front access for mail retrieval, a robust lock and the interchangeable nameplate ensure comfortable everyday use.

The advantages of the BASIC Plus 385XP ST-T system at a glance

Solid aluminium stand elements

Solidly manufactured, anodised aluminium profiles form the particularly robust base of the system. The powder-coated profile construction is designed for high stability and long-term outdoor use.

Robust multi-occupancy solution for 13 households

Briefkasten Manufaktur Lippe GmbH
Werler Straße 60
32105 Bad Salzuflen

www.briefkasten-manufaktur.de
info@briefkasten-manufaktur.de
Tel.: +49 5222 807110

Geschäftsführer Oliver Woineck
Ust.ID.Nr. DE303690847
Handelsregister Amtsgericht Lemgo, HRB 8618

13 separate mailboxes are combined into a stable freestanding system. Each compartment remains clearly assigned to a user and can be locked individually.

DIN C4 insertion with 12-litre capacity

The 300 × 110 × 385 mm compartments each provide approx. 12 litres of mail volume. The 35 × 265 mm insertion opening accepts DIN C4 envelopes in portrait orientation.

Quiet insertion and robust locking

A rubber lip reduces impact noise at the insertion flap. Robust locks, two keys per compartment and interchangeable nameplates are designed for daily use.

BASIC Plus – built for high durability

The consistent combination of V2A stainless steel and solid aluminium profiles makes the 385XP an especially robust mailbox system. The modular construction simplifies installation, maintenance and later replacement of individual components.

Equipment of the BASIC Plus 385XP ST-T mailbox system

Mailbox system

Number of mailboxes 13 individually lockable mail compartments
Individual compartment 300 × 110 × 385 mm (W × H × D)
Mail volume Approx. 12 litres per compartment
Mailbox material V2A stainless steel, powder-coated in a RAL colour of choice
Insertion opening 35 × 265 mm, suitable for DIN C4 portrait
Manufacture Made in Germany by Briefkasten Manufaktur Lippe

Mail and additional functions

Insertion flaps With noise-damping rubber lip
Mail retrieval Front access
Keys 2 keys with key number per compartment
Nameplate Solid interchangeable nameplate
Rain hood Close-fitting, robust design
Rain drainage Integrated rain drainage channels for improved water protection

Solid aluminium stand elements

Stand elements Solid anodised aluminium profile, powder-coated
Construction Designed to be particularly robust and load-bearing
Surface RAL colour matching the mailbox system
Installation Freestanding installation on a suitable foundation
Side cladding Close-fitting design
BASIC Plus Modular, maintenance-friendly and assembly-oriented design

Foundation and secure installation

Briefkasten Manufaktur Lippe GmbH
Werler Straße 60
32105 Bad Salzuflen

www.briefkasten-manufaktur.de
info@briefkasten-manufaktur.de
Tel.: +49 5222 807110

Geschäftsführer Oliver Woineck
Ust.ID.Nr. DE303690847
Handelsregister Amtsgericht Lemgo, HRB 8618

The solid aluminium stand elements require a level and sufficiently load-bearing subsoil or an appropriately dimensioned concrete foundation. Foundation size, anchoring and alignment must be coordinated with the system weight, dimensions, ground conditions and local loads.

Weather protection note

The rain hood, close-fitting side cladding and rain drainage channels support weather protection. Mail items must be fully inserted so that the insertion flaps can close completely.

BASIC Plus – robust and modular

The BASIC Plus construction relies on V2A stainless steel and solid aluminium profiles. The modular design simplifies installation and the later replacement of individual components and is intended for long service life.

Product properties

Surface/colour	RAL 9005 deep black, RAL 3004 crimson red, DB 703 iron mica, RAL 7016 anthracite grey, RAL of your choice (according to colour table), RAL 9007 grey aluminium, RAL 9016 traffic white
Series	BASIC
Boxes by volume	Normal > 10 litres
Name labelling	Nameplate
Material	Aluminium AlMg3 W19, Stainless steel V2A 1.4301
Mounting type	Free-standing
Removal of mail	On the front
Number of boxes	with 13 letterboxes

Briefkasten Manufaktur Lippe GmbH
Werler Straße 60
32105 Bad Salzuflen

www.briefkasten-manufaktur.de
info@briefkasten-manufaktur.de
Tel.: +49 5222 807110

Geschäftsführer Oliver Woineck
Ust.ID.Nr. DE303690847
Handelsregister Amtsgericht Lemgo, HRB 8618

Dimensions

Height in mm	1
Height of single box in mm	110.0
Width of single box in mm	300.0
Capacity in litres	12
Height of letterbox slot in mm	35.0
Width of letter slot in mm	265.0
Height of letterbox in mm	550.0
Width of letterbox system in mm	900.0
Overall height in mm	1200.0 | 1600.0
Total width in mm	980.0
Depth in mm	435.0
Weight in kg	88
Delivery condition	Delivery takes place in blocks; freestanding units / mailbox are supplied in separate parts.

Dimension drawing

Montagebohrungen

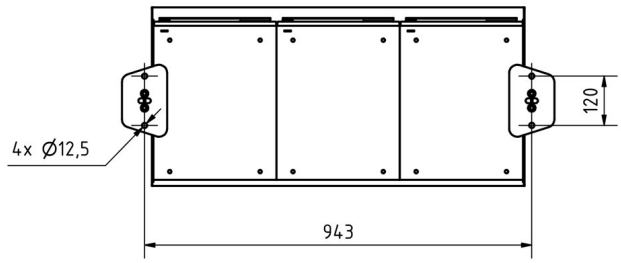

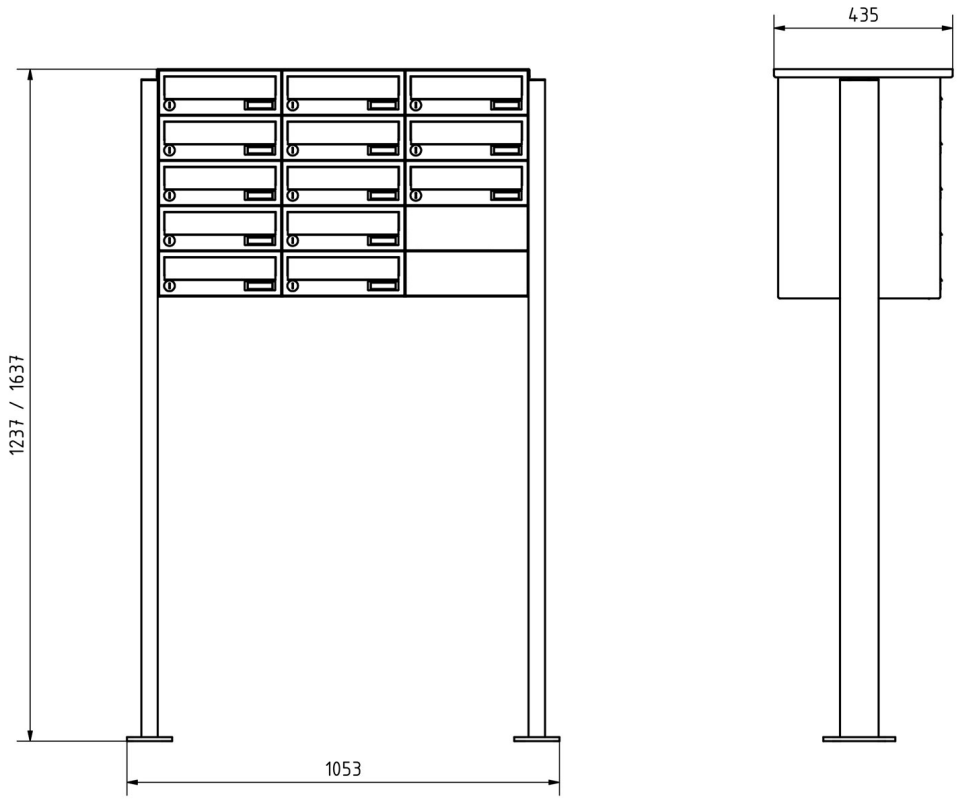

Briefkasten Manufaktur Lippe GmbH
Werler Straße 60
32105 Bad Salzuflen

www.briefkasten-manufaktur.de
info@briefkasten-manufaktur.de
Tel.: +49 5222 807110

Geschäftsführer Oliver Woineck
Ust.ID.Nr. DE303690847
Handelsregister Amtsgericht Lemgo, HRB 8618

More images









Briefkasten Manufaktur Lippe GmbH
Werler Straße 60
32105 Bad Salzuflen

www.briefkasten-manufaktur.de
info@briefkasten-manufaktur.de
Tel.: +49 5222 807110

Geschäftsführer Oliver Woineck
Ust.ID.Nr. DE303690847
Handelsregister Amtsgericht Lemgo, HRB 8618







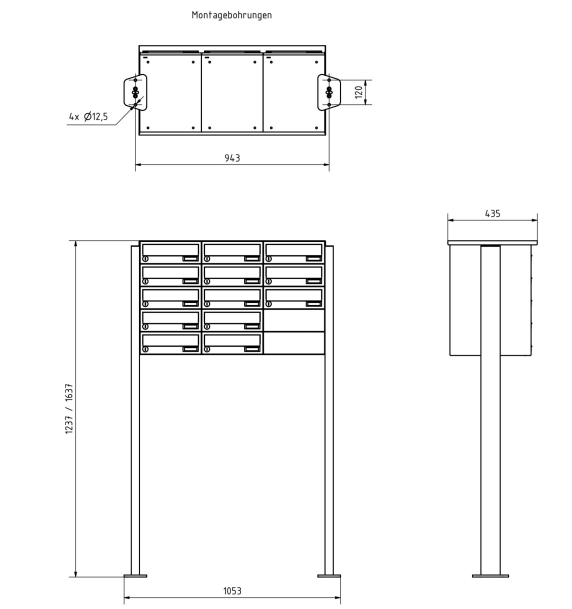

Briefkasten Manufaktur Lippe GmbH
Werler Straße 60
32105 Bad Salzuflen

www.briefkasten-manufaktur.de
info@briefkasten-manufaktur.de
Tel.: +49 5222 807110

Geschäftsführer Oliver Woineck
Ust.ID.Nr. DE303690847
Handelsregister Amtsgericht Lemgo, HRB 8618