6-unit 3x2 Designer Freestanding Letterbox GOETHE ST-Q - RAL colour of your choice | 100mm depth | with 6 mailboxes (3x2)



Product number 215-STQ-6

Product description

6-unit 3x2 design freestanding mailbox GOETHE ST-Q - RAL colour of your choice

High-quality manufactured 6-party freestanding mailbox with elegant rectangular stand elements. The modern GOETHE mailbox is ideal for a sophisticated entrance area. The linear design without a visible lock gives this mailbox a particularly elegant appearance.

The dimensions of the individual boxes provide a capacity of approx. 16 litres; the large aperture guarantees that even DIN C4 envelopes and magazines — or mail after several days' absence — will not be creased. The innovative push-key lock is concealed inside the mailbox. The key is simply inserted into the existing opening (no turning required) and the door opens. The arrangement of the lock is designed so that the collection door prevents your post from falling out. Thanks to the rain runoff edge, the internal post is optimally protected from the weather. The insertion flap is equipped with high-quality axle dampers, ensuring a quiet close and preventing annoying rattling due to weather. The replaceable Plexiglas nameplates can be easily accessed from the front; for an optimal appearance we recommend the flush-mounted nameplate with laser engraving (see Accessories). The second nameplate is fitted with the 'Advertising Yes/No' insert.

The mailbox systems of the GOETHE collection are characterised by the consistent use of stainless steel and aluminium. The result is very high durability and sustainability. The construction has been developed by our own engineers with a focus on high flexibility and modularity, easy spare-parts assembly and straightforward self-assembly. Spare parts for all GOETHE systems are available directly in our shop.

Thanks to the design, self-assembly is straightforward.

Protected utility model according to DPMA file number DE: 20 2021 101 679.5

Briefkasten Manufaktur Lippe GmbH
Werler Straße 60
32105 Bad Salzuflen

www.briefkasten-manufaktur.de
info@briefkasten-manufaktur.de
Tel.: +49 5222 807110

Geschäftsführer Oliver Woineck
Ust.ID.Nr. DE303690847
Handelsregister Amtsgericht Lemgo, HRB 8618

- 6-unit freestanding mailbox made of stainless steel and aluminium.
- Mailboxes made from stainless steel 1.4016 (non-rusting magnetic stainless steel), powder-coated in RAL colour of your choice.
- Quality manufacturing - Made in Germany by Briefkasten Manufaktur Lippe.
- Innovative push-key lock with 2 keys per unit.
- Letter insertion and collection are from the front. Insertion flap with high-quality axle dampers for very quiet mail insertion.
- The mailboxes comply with DIN/EN 13724. Slot size (3.5 cm x 36.0 cm) for C4 landscape — large envelopes fit without folding.
- Collection doors open from top to bottom, preventing your post from falling out towards you.
- Plexiglas nameplate for name inscription and a second nameplate 'Advertising Yes/No' per unit.
- Optimal weather protection thanks to rain runoff edges and a rain roof made from 3 mm aluminium AlMg3 W19, powder-coated in RAL colour of your choice.
- Side cladding made from 3 mm aluminium AlMg3 W19, powder-coated in RAL colour of your choice.
- Rear wall made from 1 mm stainless steel V2A 1.4301, powder-coated in RAL colour of your choice.
- The W 40 mm x D 80 mm stand posts are made from 2 mm stainless steel V2A 1.4301, powder-coated in RAL colour for in-ground concreting or for screw mounting.

Important information:

To achieve optimal water protection for your post, the mailbox or mailbox system should, if possible, be located under a canopy.

Mail items are only protected from water if they are placed completely inside the box and the insertion flap is closed. Mail that is not fully inserted allows moisture and dirt to enter the mailbox. This system is protected against ingress of water according to DIN EN 13724. Water ingress is not a valid reason for complaint.

Product properties

Surface/colour	RAL 9005 deep black, RAL 3004 crimson red, DB 703 iron mica, RAL 7016 anthracite grey, RAL of your choice (according to colour table), RAL 9007 grey aluminium, RAL 9016 traffic white
Series	GOETHE
Number of boxes	with 6 letterboxes
Name labelling	Nameplate
Material	Aluminium AlMg3 W19, Stainless steel V2A 1.4301, Stainless steel 1.4016 (non-rusting magnetic stainless steel)
Mounting type	Free-standing
Removal of mail	On the front
Boxes by volume	Large > 16 litres

Briefkasten Manufaktur Lippe GmbH
Werler Straße 60
32105 Bad Salzuflen

www.briefkasten-manufaktur.de
info@briefkasten-manufaktur.de
Tel.: +49 5222 807110

Geschäftsführer Oliver Woineck
Ust.ID.Nr. DE303690847
Handelsregister Amtsgericht Lemgo, HRB 8618

Dimensions

Width in mm	1
Height in mm	1
Height of single box in mm	400,0
Width of single box in mm	400,0
Capacity in litres	16
Height of letterbox slot in mm	35,0
Width of letter slot in mm	360,0
Height of letterbox in mm	800,0
Width of letterbox system in mm	1200,0
Overall height in mm	1200,0 | 1500,0 | 1700,0 + 23,0
Total width in mm	1288,0
Depth in mm	100.0 + 25.0 Rain roof
Weight in kg	64
Delivery condition	Supplied in blocks, stand elements / letterbox divided

Dimension drawing

Briefkasten Manufaktur Lippe GmbH
Werler Straße 60
32105 Bad Salzuflen

www.briefkasten-manufaktur.de
info@briefkasten-manufaktur.de
Tel.: +49 5222 807110

Geschäftsführer Oliver Woineck
Ust.ID.Nr. DE303690847
Handelsregister Amtsgericht Lemgo, HRB 8618

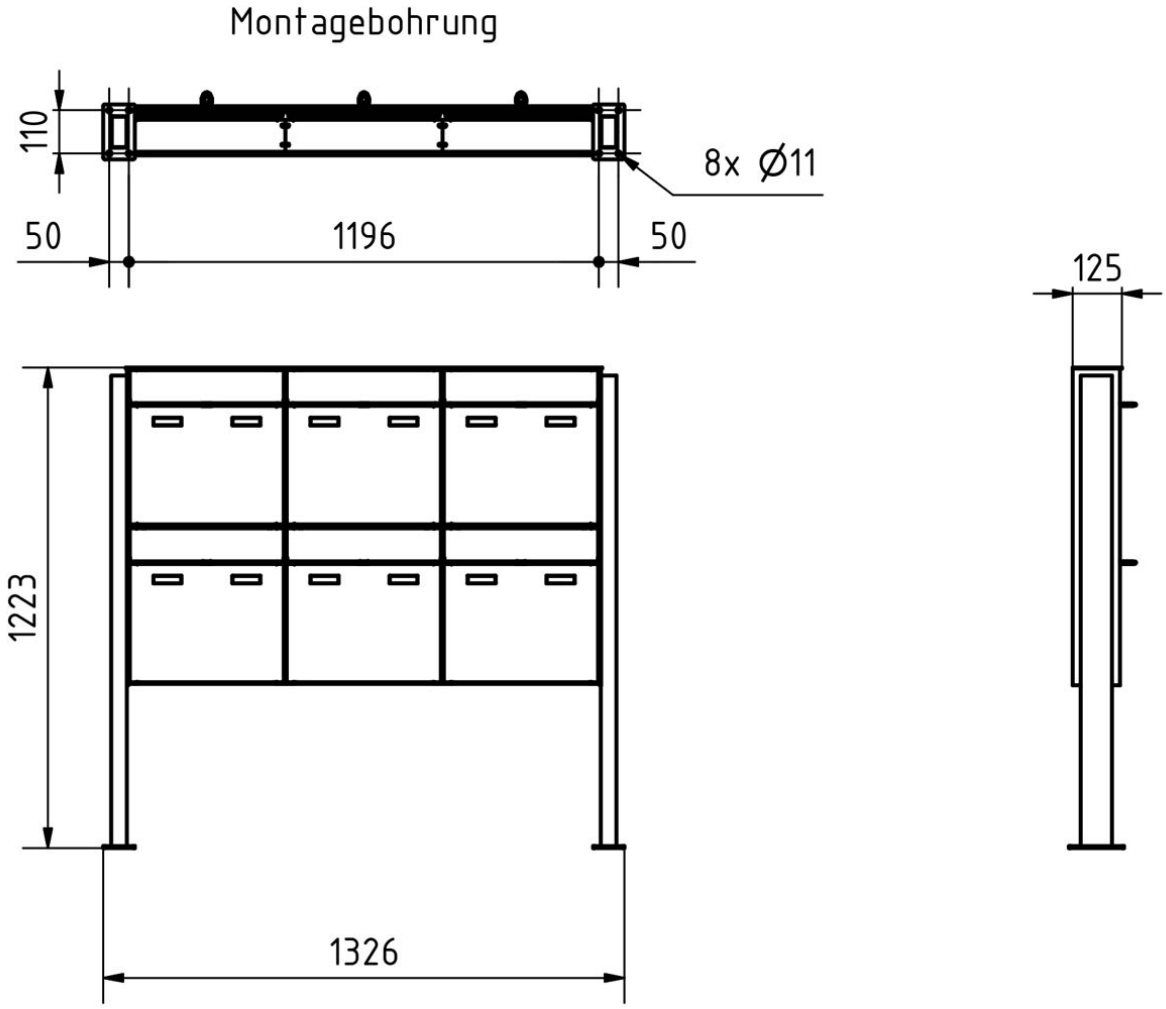

Briefkasten Manufaktur Lippe GmbH
Werler Straße 60
32105 Bad Salzuflen

www.briefkasten-manufaktur.de
info@briefkasten-manufaktur.de
Tel.: +49 5222 807110

Geschäftsführer Oliver Woineck
Ust.ID.Nr. DE303690847
Handelsregister Amtsgericht Lemgo, HRB 8618

More images

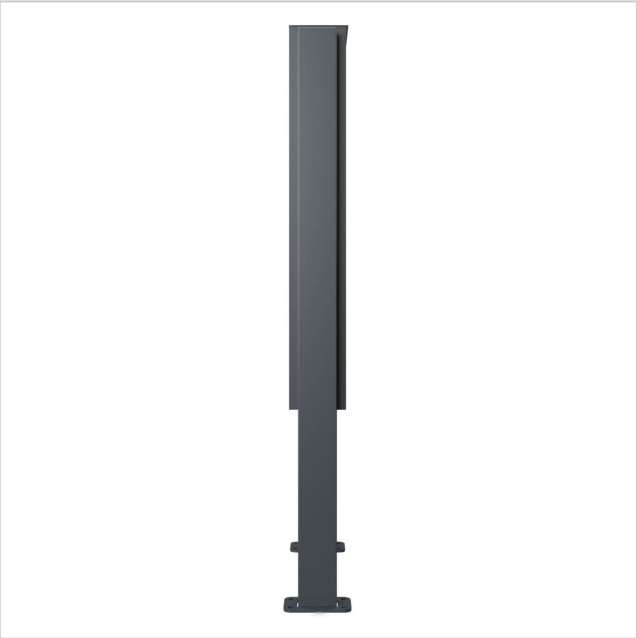







Briefkasten Manufaktur Lippe GmbH
Werler Straße 60
32105 Bad Salzuflen

www.briefkasten-manufaktur.de
info@briefkasten-manufaktur.de
Tel.: +49 5222 807110

Geschäftsführer Oliver Woineck
Ust.ID.Nr. DE303690847
Handelsregister Amtsgericht Lemgo, HRB 8618

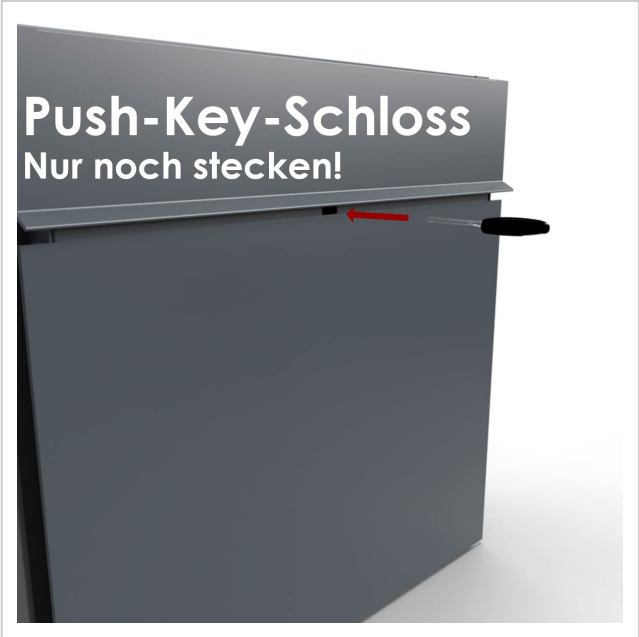





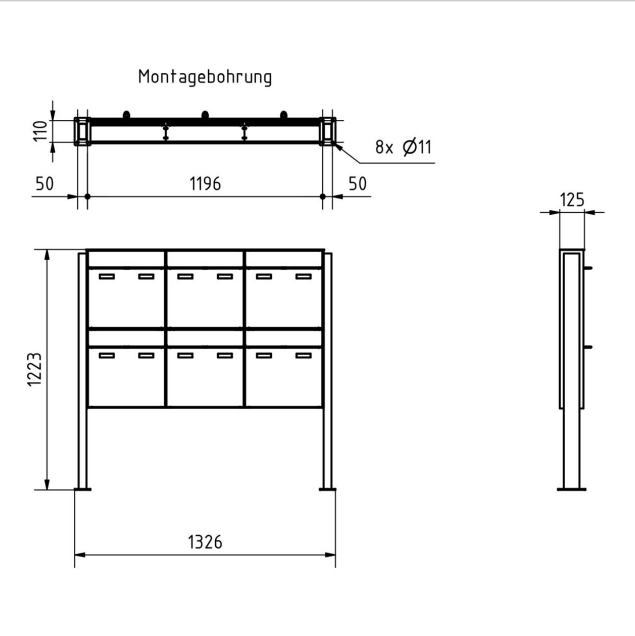

Briefkasten Manufaktur Lippe GmbH
Werler Straße 60
32105 Bad Salzuflen

www.briefkasten-manufaktur.de
info@briefkasten-manufaktur.de
Tel.: +49 5222 807110

Geschäftsführer Oliver Woineck
Ust.ID.Nr. DE303690847
Handelsregister Amtsgericht Lemgo, HRB 8618