3-unit stainless steel surface-mounted mailbox BASIC Plus 382X AP with side-mounted doorbell box | Left | 150mm depth | with 3 mailboxes (3x1) | Stainless steel, brushed



Product number 382XA-3W-SP-L-150

Product description

3-unit stainless steel surface-mounted mailbox BASIC Plus 382X AP with side bell box

German quality manufacture "Made in Germany" by Briefkasten Manufaktur. The complete 3-unit surface-mounted mailbox is made of weather-resistant stainless steel V2A, brushed. A drip edge for optimal water protection, a double-folded letter flap with rubber buffer, a robust interchangeable nameplate, a practical mail-retaining bar and a very sturdy lock characterise this stainless steel mailbox.

The mailbox systems of the BASIC Plus collection are distinguished by the consistent use of stainless steel V2A. The result is very high durability and sustainability. The construction has been developed by our own engineers with a view to high flexibility and modularity, easy spare-part installation and straightforward self-assembly. Spare parts are directly available for all BASIC Plus systems.

Thanks to the design, self-assembly is uncomplicated. The mailbox system is prepared for straightforward complete installation, so no elaborate wall installation of individual boxes is necessary. 3-unit surface-mounted mailbox made of high-quality, weather-resistant stainless steel V2A 1.4301, brushed.

Advantages at a glance

Close-fitting stainless steel cladding with rain hood

Side cladding and rain hood are included in this version and are made of brushed stainless steel V2A. The close-fitting design forms a closed, constructively coordinated unit with the mailbox system.

Generous letter slot

The slot measures 35 × 325 mm and is designed for DIN C4 landscape. The mailbox complies with DIN EN 13724.

Briefkasten Manufaktur Lippe GmbH
Werler Straße 60
32105 Bad Salzuflen

www.briefkasten-manufaktur.de
info@briefkasten-manufaktur.de
Tel.: +49 5222 807110

Geschäftsführer Oliver Woineck
Ust.ID.Nr. DE303690847
Handelsregister Amtsgericht Lemgo, HRB 8618

Quiet insertion and convenient retrieval

The integrated flap damping with rubber buffer reduces impact noise during insertion. The mail-retaining bar holds items back during removal.

Integrated doorbell and intercom area

Bell box made of stainless steel V2A 1.4301, brushed. A stainless steel doorbell push-button Type 4 is used. Prepared optionally with a speaker grille for the installation of standard intercom systems or flush-fit speakers. (Intercom system/flush-fit speakers not included). An option with the Comelit Ultra video complete set is also available.

Quality manufacture and considered construction

The system is manufactured at Briefkasten Manufaktur in Germany. The design is intended for straightforward self-assembly.

Equipment and product details

Mailbox system

Number of mailboxes 3 separately usable post compartments
Arrangement 3 × 1
Depth 150 mm
Mailbox material Stainless steel V2A 1.4301
Mailbox finish Brushed
Bell/intercom unit Bell box made of stainless steel V2A 1.4301, brushed

Post and operation

Letter slot 35 × 325 mm, suitable for DIN C4 landscape
Standard DIN EN 13724
Insertion flap Noise-damped by rubber buffer
Keys 2 keys with key number per mailbox
Nameplate Interchangeable nameplate below the letter flap
Mail-retaining bar Integrated for each mailbox

Mounting and equipment

Type of installation Surface-mounted
Drip edge Integrated into the construction
Rain hood Made of stainless steel V2A, brushed
Side cladding Made of stainless steel V2A, brushed
Mounting materials For wall mounting incl. mounting rail and fixing material (screws + wall plugs)
Manufacture Made in Germany by Briefkasten Manufaktur Lippe

Note on weather protection

Mail is optimally protected from moisture and dirt when fully inserted and with the flap closed. Oversized items may prevent the flap from closing completely.

Briefkasten Manufaktur Lippe GmbH
Werler Straße 60
32105 Bad Salzuflen

www.briefkasten-manufaktur.de
info@briefkasten-manufaktur.de
Tel.: +49 5222 807110

Geschäftsführer Oliver Woineck
Ust.ID.Nr. DE303690847
Handelsregister Amtsgericht Lemgo, HRB 8618

Note on wall mounting

Before installation, the load-bearing capacity and condition of the wall must be checked. The fixings must be matched to the weight of the unit and the existing wall construction.

Product properties

Series	BASIC
Number of bell push buttons	1 button, 2 buttons, 3 buttons
Functions	Light button, Intercom
Functional box prepared for manufacturer	GIRA, Busch Jaeger, Siedle, STR Elektronik, ELCOM, TCS, Ritto, ALGO, Telegärtner, Auerswald, Legrand Bticino, Comelit
Name labelling	Nameplate
Material	Stainless steel V2A 1.4301
Removal of mail	On the front
Surface/colour	Brushed
Boxes by volume	Large > 16 litres
Mounting type	Surface-mounted
Number of boxes	with 3 letterboxes

Dimensions

Height of single box in mm	330.0
Width of single box in mm	355.0
Capacity in litres	12.0 | 17.0
Height of letterbox slot in mm	35.0
Width of letter slot in mm	325.0
Height of letterbox in mm	330.0
Width of letterbox system in mm	1235.0
Total width in mm	1235.0
Depth in mm	100.0 | 150.0
Weight in kg	12

Briefkasten Manufaktur Lippe GmbH
Werler Straße 60
32105 Bad Salzuflen

www.briefkasten-manufaktur.de
info@briefkasten-manufaktur.de
Tel.: +49 5222 807110

Geschäftsführer Oliver Woineck
Ust.ID.Nr. DE303690847
Handelsregister Amtsgericht Lemgo, HRB 8618

More images







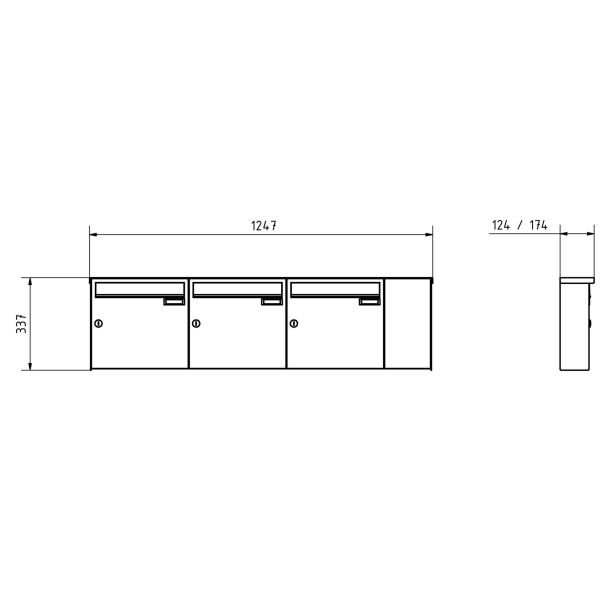

Briefkasten Manufaktur Lippe GmbH
Werler Straße 60
32105 Bad Salzuflen

www.briefkasten-manufaktur.de
info@briefkasten-manufaktur.de
Tel.: +49 5222 807110

Geschäftsführer Oliver Woineck
Ust.ID.Nr. DE303690847
Handelsregister Amtsgericht Lemgo, HRB 8618









Briefkasten Manufaktur Lippe GmbH
Werler Straße 60
32105 Bad Salzuflen

www.briefkasten-manufaktur.de
info@briefkasten-manufaktur.de
Tel.: +49 5222 807110

Geschäftsführer Oliver Woineck
Ust.ID.Nr. DE303690847
Handelsregister Amtsgericht Lemgo, HRB 8618



Briefkasten Manufaktur Lippe GmbH
Werler Straße 60
32105 Bad Salzuflen

www.briefkasten-manufaktur.de
info@briefkasten-manufaktur.de
Tel.: +49 5222 807110

Geschäftsführer Oliver Woineck
Ust.ID.Nr. DE303690847
Handelsregister Amtsgericht Lemgo, HRB 8618