6-unit stainless steel mailbox system Design BASIC Plus 385XW for side wall mounting - RAL colour of your choice | Left | with 6 mailboxes (1x6)



Product number 385XW-6S

Product description

Side-mounted BASIC Plus 385XW mailbox system for 6 households – box position left

The BASIC Plus 385XW is a high-quality stainless steel mailbox system for side wall mounting for 6 households. It has been developed for apartment buildings, office buildings and smaller residential complexes and enables space-saving installation to the side of the front door or on a suitable wall surface.

Six separate mail compartments are arranged one above the other in a space-saving manner, forming a robust, linear unit directly at the building entrance.

The mailboxes are made of stainless steel V2A 1.4301 and are powder-coated in a RAL or DB colour of your choice. The rain hood and side cladding are also made of stainless steel. The lateral attachment is carried out via 60.3 mm thick stainless steel posts with a 240-grit brushed finish.

In this product variant the box position is on the left. The lateral arrangement creates a clear mounting edge and allows the mailbox system to be aligned to suit the structural situation at the entrance.

The advantages of the BASIC Plus 385XW at a glance

Heavy-duty stainless steel mounting posts

Side wall attachment is via Ø 60.3 mm posts made of stainless steel V2A 1.4301 with a 240-grit brushed finish. They provide a stable and long-lasting connection between the mailbox system and the building wall.

Side wall mounting

Briefkasten Manufaktur Lippe GmbH
Werler Straße 60
32105 Bad Salzuflen

www.briefkasten-manufaktur.de
info@briefkasten-manufaktur.de
Tel.: +49 5222 807110

Geschäftsführer Oliver Woineck
Ust.ID.Nr. DE303690847
Handelsregister Amtsgericht Lemgo, HRB 8618

The 385XW is mounted to the side of a suitable wall. The box position of this variant is left; this allows the system to be specifically adapted to the existing entrance situation.

BASIC Plus in stainless steel V2A

Mailboxes, cladding and the fixing elements consistently use stainless steel V2A 1.4301. The powder-coated mailboxes combine a high-quality surface with a durable construction.

DIN-C4 letter slot with rubber lip

Each compartment has an insertion opening of 35 × 265 mm suitable for DIN C4 portrait. A noise-dampening rubber lip reduces the impact of the insertion flap.

Robust solution for 6 households

Six mailboxes, a narrow design and consistent use of stainless steel result in a durable multi-occupancy solution. The modular BASIC-Plus construction also facilitates maintenance and spare-part replacement.

Equipment of the BASIC Plus 385XW for 6 households

Mailbox system

Number of compartments 6 mailboxes
Arrangement 1 column × 6 rows
Material Stainless steel V2A 1.4301
Surface Powder-coated in RAL/DB colour of choice
Rain hood / side cladding Stainless steel V2A 1.4301, powder-coated to match
Manufacture Made in Germany by Briefkasten Manufaktur Lippe

Mail and operation

Letter slot 35 × 265 mm per mailbox, suitable for DIN C4 portrait
Mail volume Approx. 12 litres per mailbox
Insertion flaps With noise-dampening rubber lip
Mail retrieval From the front
Door opening From left to right
Keys 12 keys in total, 2 per mailbox
Nameplates 6 changeable nameplates under the letter flaps

Lateral attachment

Box position Left
Mounting posts Ø 60.3 mm stainless steel V2A 1.4301
Post surface 240-grit brushed finish
Type of installation Screw mounting to a suitable wall
Fixings Choose bolt anchors or coach screws on site according to the wall
Standard Mailboxes in accordance with DIN EN 13724

Note on side wall mounting

Briefkasten Manufaktur Lippe GmbH
Werler Straße 60
32105 Bad Salzuflen

www.briefkasten-manufaktur.de
info@briefkasten-manufaktur.de
Tel.: +49 5222 807110

Geschäftsführer Oliver Woineck
Ust.ID.Nr. DE303690847
Handelsregister Amtsgericht Lemgo, HRB 8618

The wall must be clean, even and sufficiently load-bearing for the weight of the complete mailbox system. Bolt anchors or coach screws are not included and must be chosen to suit the wall construction, the weight of the system and the local installation situation.

Note on weather protection

Items must be fully inserted so that the insertion flaps can close. Wherever possible, the letter-front should not be directly exposed to the prevailing weather. In extreme weather conditions, moisture may penetrate despite compliant construction.

Maintenance and BASIC-Plus construction

Stainless steel V2A is low-maintenance and durable. The modular BASIC-Plus construction has been designed for straightforward installation and good spare parts availability.

Product properties

Surface/colour	RAL 9005 deep black, RAL 3004 crimson red, DB 703 iron mica, RAL 7016 anthracite grey, RAL of your choice (according to colour table), RAL 9007 grey aluminium, RAL 9016 traffic white
Series	BASIC
Number of boxes	with 6 letterboxes
Boxes by volume	Normal > 10 litres
Name labelling	Nameplate
Material	Stainless steel V2A 1.4301
House number	House number as laser engraving
Removal of mail	On the front
Mounting type	Surface-mounted

Briefkasten Manufaktur Lippe GmbH
Werler Straße 60
32105 Bad Salzuflen

www.briefkasten-manufaktur.de
info@briefkasten-manufaktur.de
Tel.: +49 5222 807110

Geschäftsführer Oliver Woineck
Ust.ID.Nr. DE303690847
Handelsregister Amtsgericht Lemgo, HRB 8618

Dimensions

Height in mm	820
Height of single box in mm	110.0
Width of single box in mm	300.0
Capacity in litres	12
Height of letterbox slot in mm	35.0
Width of letter slot in mm	265.0
Height of letterbox in mm	660.0
Width of letterbox system in mm	300.0
Total width in mm	400.0
Depth in mm	435.0
Weight in kg	37
Delivery condition	Delivery is made in blocks; stand elements / mailbox are supplied in separate parts.

Dimension drawing

Briefkasten Manufaktur Lippe GmbH
Werler Straße 60
32105 Bad Salzuflen

www.briefkasten-manufaktur.de
info@briefkasten-manufaktur.de
Tel.: +49 5222 807110

Geschäftsführer Oliver Woineck
Ust.ID.Nr. DE303690847
Handelsregister Amtsgericht Lemgo, HRB 8618

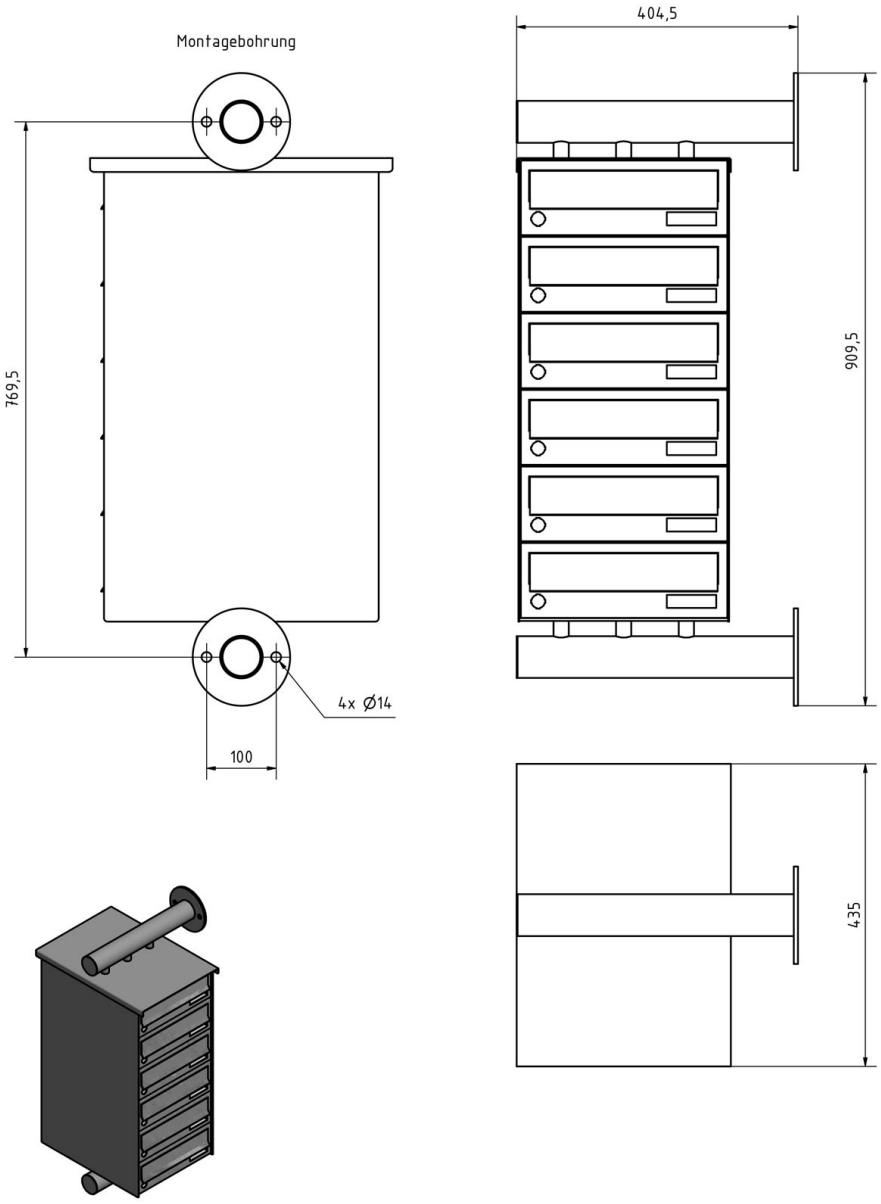
Montagebohrung
769,5
4x Ø14
100
404,5
909,5
435

More images









Briefkasten Manufaktur Lippe GmbH
Werler Straße 60
32105 Bad Salzuflen

www.briefkasten-manufaktur.de
info@briefkasten-manufaktur.de
Tel.: +49 5222 807110

Geschäftsführer Oliver Woineck
Ust.ID.Nr. DE303690847
Handelsregister Amtsgericht Lemgo, HRB 8618

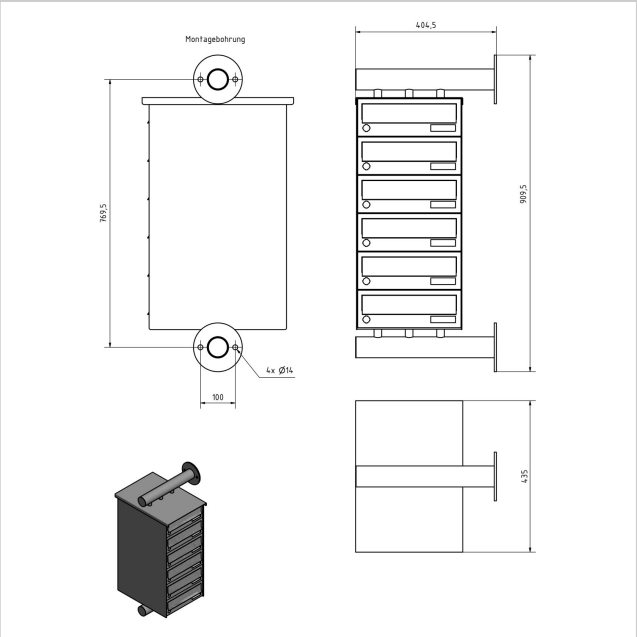







Briefkasten Manufaktur Lippe GmbH
Werler Straße 60
32105 Bad Salzuflen

www.briefkasten-manufaktur.de
info@briefkasten-manufaktur.de
Tel.: +49 5222 807110

Geschäftsführer Oliver Woineck
Ust.ID.Nr. DE303690847
Handelsregister Amtsgericht Lemgo, HRB 8618







Briefkasten Manufaktur Lippe GmbH
Werler Straße 60
32105 Bad Salzuflen

www.briefkasten-manufaktur.de
info@briefkasten-manufaktur.de
Tel.: +49 5222 807110

Geschäftsführer Oliver Woineck
Ust.ID.Nr. DE303690847
Handelsregister Amtsgericht Lemgo, HRB 8618