6-post fence letterbox design BASIC Plus 380XZ ST-T with bell box - RAL of your choice | with 6 letterboxes (2x3)



Product number 380XZ-P-6-SP

Product description

6-post fence letter box design BASIC Plus 380XZ ST-T with bell box - RAL of your choice

High-quality fence mailbox for 6 parties made in Germany by Briefkasten Manufaktur.

The letterboxes are made of stainless steel V2A, powder-coated in RAL colour, the stand elements are made of aluminium, powder-coated in RAL colour. The very high-quality workmanship and the well thought-out concept make this letterbox system our top seller. A rain drainage edge for optimum water protection, a continuous rubber lip for quiet insertion, the solid interchangeable nameplate, a practical post holder and the very robust lock characterise this free-standing letter box. This letterbox is easy to clean and robust.

The letterbox systems in the BASIC Plus collection are characterised by the consistent use of V2A stainless steel and aluminium. The result is a very long service life and sustainability. The design has been developed by our own engineers with a view to high flexibility and modularity, simple spare parts assembly and uncomplicated self-assembly. Spare parts are directly available for all BASIC Plus systems.

Briefkasten Manufaktur Lippe GmbH
Werler Straße 60
32105 Bad Salzuflen

www.briefkasten-manufaktur.de
info@briefkasten-manufaktur.de
Tel.: +49 5222 807110

Geschäftsführer Oliver Woineck
Ust.ID.Nr. DE303690847
Handelsregister Amtsgericht Lemgo, HRB 8618

- **6-post letterbox as fence letterbox with letterboxes made of stainless steel V2A, powder-coated in RAL colour**
- The system is manufactured by Briefkasten Manufaktur. German quality production "Made in Germany".
- It is inserted from the front and removed from the back.
- The letterbox complies with DIN/EN 13724. Insertion size (3.5 cm x 32.5 cm) for C4 landscape, large letters also fit in here without creasing.
- Insertion flap with sound-absorbing rubber seal for very quiet mail insertion.
- The doors can be opened from left to right.
- Incl. 2 keys with key number, changeable name plate under the flap and post holder.
- Incl. side cladding + rain cover made of V2A stainless steel, powder-coated in RAL colour.
- **Bell box made of V2A stainless steel, powder-coated in RAL colour**
- Speech perforation with universal adapter. (Intercom system/ built-in loudspeaker not included in scope of delivery). Also available without speech perforation.
- Universal adapter is suitable for all commercially available built-in loudspeakers (Siedle, Ritto, TCS, Busch-Jäger, Gira, Legrand Bticino, ELCOM, Auerswald, Comelit and many more).
- Round stainless steel bell push button type: Grothe Protact, max. 24 V AC/DC, 1.5 A, IP 54 (pressure force limitation).
- Anti-vandalism - The nameplate is indentation-proof and impact-resistant, the plastic is flame-retardant.
- Cable access: Ø 14 mm (on the right side). Invisible cable routing through the stand element.
- The stand elements are made of aluminium profile, powder-coated in RAL colour for screw mounting or setting in concrete.

Important information

Camera or intercom preparation

The intercom systems must be connected by an electrician. Please contact your trusted electrician for planning, fitting and installation.

Water protection

The mail is only protected against moisture and dirt when it is fully inserted and the flap is closed. Under certain extreme weather conditions, water can still enter (up to 1ccm according to DIN EN 13724). This is not a reason for complaint.

Briefkasten Manufaktur Lippe GmbH
Werler Straße 60
32105 Bad Salzuflen

www.briefkasten-manufaktur.de
info@briefkasten-manufaktur.de
Tel.: +49 5222 807110

Geschäftsführer Oliver Woineck
Ust.ID.Nr. DE303690847
Handelsregister Amtsgericht Lemgo, HRB 8618

Product properties

Surface/colour	RAL 9005 deep black, RAL 3004 crimson red, DB 703 iron mica, RAL 7016 anthracite grey, RAL of your choice (according to colour table), RAL 9007 grey aluminium, RAL 9016 traffic white
Series	BASIC
Number of bell push buttons	6 buttons
Functions	Light button, Intercom
Functional box prepared for manufacturer	GIRA, Busch Jaeger, Siedle, STR Elektronik, ELCOM, TCS, Ritto, ALGO, Telegärtner, Auerswald, Legrand Bticino, Comelit
Number of boxes	with 6 letterboxes
Boxes by volume	Normal > 10 litres
Name labelling	Nameplate
Material	Aluminium AlMg3 W19, Stainless steel V2A 1.4301
Mounting type	Free-standing
Removal of mail	On the back

Briefkasten Manufaktur Lippe GmbH
Werler Straße 60
32105 Bad Salzuflen

www.briefkasten-manufaktur.de
info@briefkasten-manufaktur.de
Tel.: +49 5222 807110

Geschäftsführer Oliver Woineck
Ust.ID.Nr. DE303690847
Handelsregister Amtsgericht Lemgo, HRB 8618

Dimensions

Height of single box in mm	330,0
Width of single box in mm	355,0
Capacity in litres	12
Height of letterbox slot in mm	35,0
Width of letter slot in mm	325,0
Height of letterbox in mm	1090,0
Width of letterbox system in mm	710,0
Overall height in mm	1200,0 | 1600,0
Total width in mm	535,0
Depth in mm	100,0
Weight in kg	36
Delivery condition	Supplied in blocks, stand elements / letterbox divided

Briefkasten Manufaktur Lippe GmbH
Werler Straße 60
32105 Bad Salzuflen

www.briefkasten-manufaktur.de
info@briefkasten-manufaktur.de
Tel.: +49 5222 807110

Geschäftsführer Oliver Woineck
Ust.ID.Nr. DE303690847
Handelsregister Amtsgericht Lemgo, HRB 8618

Dimension drawing

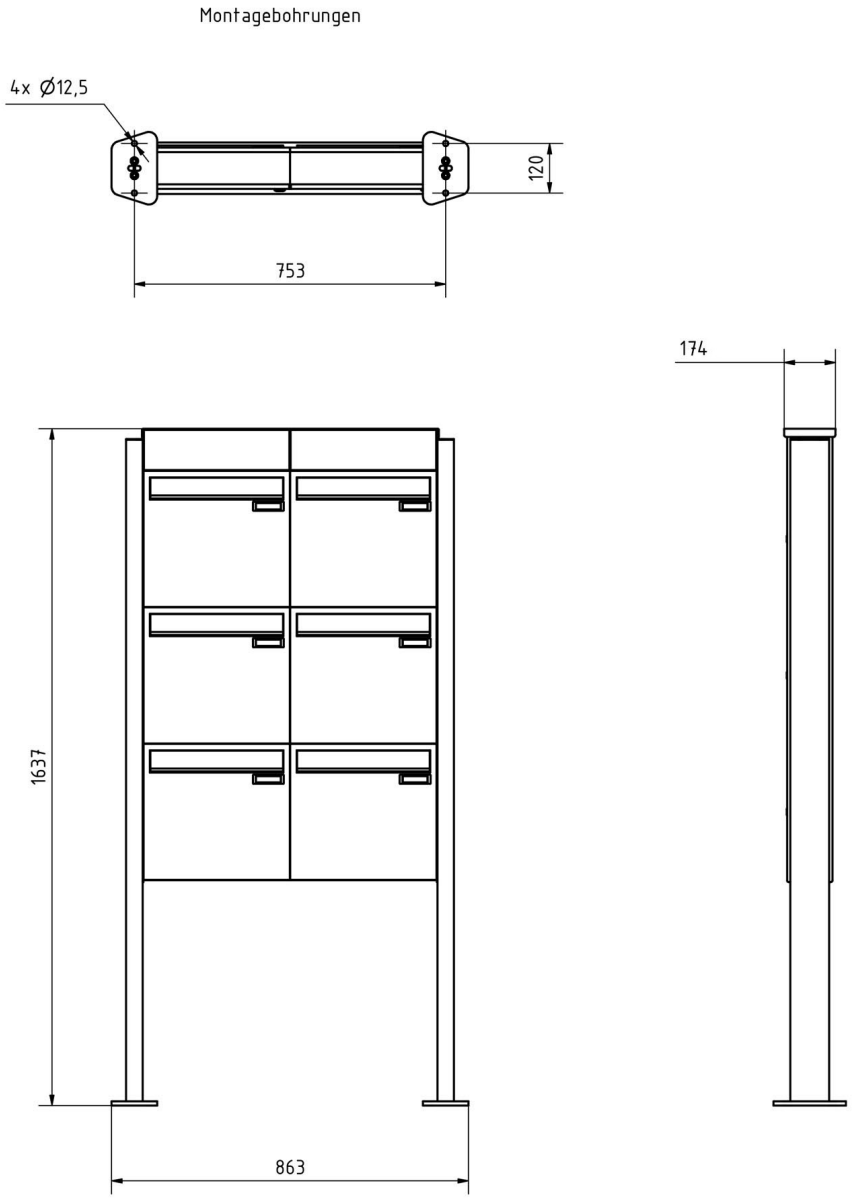

Briefkasten Manufaktur Lippe GmbH
Werler Straße 60
32105 Bad Salzuflen

www.briefkasten-manufaktur.de
info@briefkasten-manufaktur.de
Tel.: +49 5222 807110

Geschäftsführer Oliver Woineck
Ust.ID.Nr. DE303690847
Handelsregister Amtsgericht Lemgo, HRB 8618

More images









Briefkasten Manufaktur Lippe GmbH
Werler Straße 60
32105 Bad Salzuflen

www.briefkasten-manufaktur.de
info@briefkasten-manufaktur.de
Tel.: +49 5222 807110

Geschäftsführer Oliver Woineck
Ust.ID.Nr. DE303690847
Handelsregister Amtsgericht Lemgo, HRB 8618







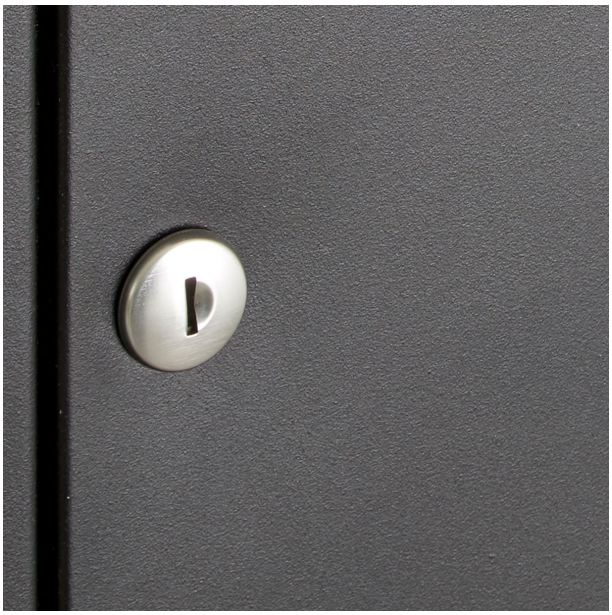

Briefkasten Manufaktur Lippe GmbH
Werler Straße 60
32105 Bad Salzuflen

www.briefkasten-manufaktur.de
info@briefkasten-manufaktur.de
Tel.: +49 5222 807110

Geschäftsführer Oliver Woineck
Ust.ID.Nr. DE303690847
Handelsregister Amtsgericht Lemgo, HRB 8618

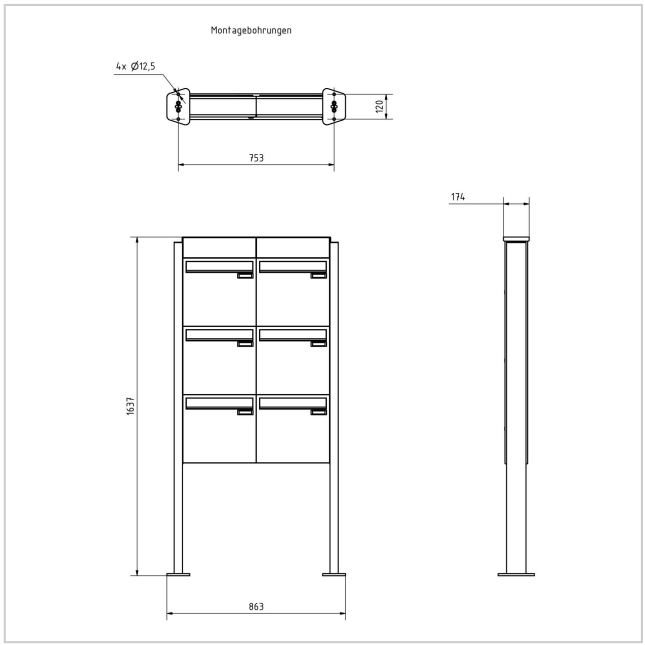



Briefkasten Manufaktur Lippe GmbH
Werler Straße 60
32105 Bad Salzuflen

www.briefkasten-manufaktur.de
info@briefkasten-manufaktur.de
Tel.: +49 5222 807110

Geschäftsführer Oliver Woineck
Ust.ID.Nr. DE303690847
Handelsregister Amtsgericht Lemgo, HRB 8618