4-unit 6x1 stainless steel freestanding mailbox Design BASIC Plus 385X ST-R with bell box - RAL colour of your choice | ? Colour of your choice | Top | with 4 mailboxes

Product number 385XR-4-SP



Product description

Freestanding mailbox system BASIC Plus 385X ST-R with bell/intercom unit for 4 households

The freestanding BASIC Plus 385X ST-R mailbox system for 4 households combines high-quality mailboxes with an integrated bell/intercom unit. This creates a compact entrance solution for apartment buildings, residential complexes as well as office and commercial properties, bringing mailbox, doorbell buttons and provision for a built-in loudspeaker together in a single unit.

The mailboxes are made of stainless steel V2A and are powder-coated in the selected RAL colour. The weather-resistant support posts made of brushed stainless steel V2A 1.4301 provide a high-quality contrast and form the stable freestanding substructure.

Each mailbox offers a volume of approx. 12 litres. The 35 × 265 mm letter slot is designed for DIN C4 items in portrait format. A noise-dampening rubber lip on the inlet flap, front mail collection and robust doors opening from left to right ensure practical everyday operation.

Advantages of the BASIC Plus 385X ST-R system at a glance

Mailbox and bell in one unit

4 individually usable mailboxes are combined with an integrated bell/intercom unit. This keeps the entrance area functional and visually unified.

Solid stainless steel support posts

Ø 60 mm sturdy support posts made of brushed stainless steel V2A 1.4301 form a stable base for the freestanding mailbox system. The robust construction is designed for permanent use at the property entrance.

Briefkasten Manufaktur Lippe GmbH
Werler Straße 60
32105 Bad Salzuflen

www.briefkasten-manufaktur.de
info@briefkasten-manufaktur.de
Tel.: +49 5222 807110

Geschäftsführer Oliver Woineck
Ust.ID.Nr. DE303690847
Handelsregister Amtsgericht Lemgo, HRB 8618

DIN C4 inlet and 12-litre capacity

The 300 × 110 × 385 mm (W × H × D) mailboxes each offer approx. 12 litres of capacity. The 35 × 265 mm letter slot also accepts larger DIN C4 mail in portrait format.

Prepared for built-in speakers

The speaker perforation is fitted with a universal adapter.

BASIC Plus – colour of your choice

The powder-coated V2A mailboxes can be chosen in a RAL colour to match the architecture. Brushed stainless steel support posts, modular construction and German manufacture complete the durable system.

Equipment of the BASIC Plus 385X ST-R mailbox system

Mailbox system

Number of mailboxes 4 separately lockable mailboxes
Single mailbox 300 × 110 × 385 mm (W × H × D)
Capacity Approx. 12 litres per mailbox
Material Stainless steel V2A, powder-coated in RAL colour of your choice
Letter slot 35 × 265 mm, suitable for DIN C4 portrait
Standard Mailboxes conforming to DIN EN 13724

Bell and intercom unit

Doorbell buttons 4 round stainless steel doorbell buttons, type 4
Bell/intercom unit Stainless steel V2A, powder-coated in RAL colour
Intercom provision Speaker perforation with universal adapter for standard built-in speakers
Faceplate position Depending on the chosen configuration: left, top or right
Cable entry Side cable entry; concealed cable routing through the support post

Support posts and installation

Support posts Ø 60 mm stainless steel V2A 1.4301, brushed
Types of installation Available either for bolted mounting or for concreting in
Overall height Depending on the chosen support post variant
Base material Consistent use of stainless steel V2A
Construction Modular and assembly-friendly
Manufacturing Made in Germany by Briefkasten Manufaktur Lippe

Note on the bell/intercom unit

The intercom preparation is intended for the installation of a suitable built-in speaker. Planning, electrical connection and commissioning of the intercom system should be carried out by appropriately qualified professionals.

Installation of the freestanding unit

For bolted mounting a level, sufficiently load-bearing foundation is required. For the concreting-in version the support posts must be plumb and permanently anchored in a suitably dimensioned concrete foundation. Fixing and the foundation must be adapted to the system weight, ground conditions and local circumstances.

Note on weather protection

Mail is best protected from moisture and dirt only when items are fully inserted and the letter flaps are closed. Protruding letters or magazines can prevent the flaps from closing completely.

BASIC Plus construction and spare parts

The BASIC Plus series is modular and assembly-friendly. The consistent use of stainless steel V2A supports a long service life; spare parts for BASIC Plus systems are readily available.

Product properties

Surface/colour	RAL 9005 deep black, RAL 3004 crimson red, DB 703 iron mica, RAL 7016 anthracite grey, RAL of your choice (according to colour table), RAL 9007 grey aluminium, RAL 9016 traffic white
Series	BASIC
Number of bell push buttons	4 buttons
Functions	Light button, Intercom
Functional box prepared for manufacturer	GIRA, Busch Jaeger, Siedle, STR Elektronik, ELCOM, TCS, Ritto, ALGO, Telegärtner, Auerswald, Legrand Bticino, Comelit
Boxes by volume	Normal > 10 litres
Number of boxes	with 4 letterboxes
Name labelling	Nameplate
Mounting type	Free-standing
Material	Stainless steel V2A 1.4301
Removal of mail	On the front

Briefkasten Manufaktur Lippe GmbH
Werler Straße 60
32105 Bad Salzuflen

www.briefkasten-manufaktur.de
info@briefkasten-manufaktur.de
Tel.: +49 5222 807110

Geschäftsführer Oliver Woineck
Ust.ID.Nr. DE303690847
Handelsregister Amtsgericht Lemgo, HRB 8618

Dimensions

Height of single box in mm	110.0
Width of single box in mm	300.0
Capacity in litres	12
Height of letterbox slot in mm	35.0
Width of letter slot in mm	265.0
Height of letterbox in mm	660.0
Width of letterbox system in mm	300.0
Overall height in mm	1200.0 | 1500.0 | 1700.0
Total width in mm	465.0
Depth in mm	435.0
Weight in kg	38
Delivery condition	Delivery is in blocks; freestanding elements / mailbox are delivered separately.

Dimension drawing

Briefkasten Manufaktur Lippe GmbH
Werler Straße 60
32105 Bad Salzuflen

www.briefkasten-manufaktur.de
info@briefkasten-manufaktur.de
Tel.: +49 5222 807110

Geschäftsführer Oliver Woineck
Ust.ID.Nr. DE303690847
Handelsregister Amtsgericht Lemgo, HRB 8618

Montagebohrungen

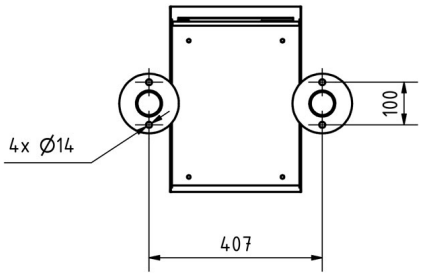

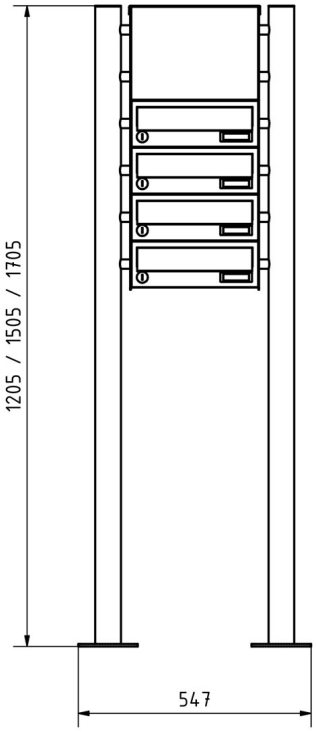

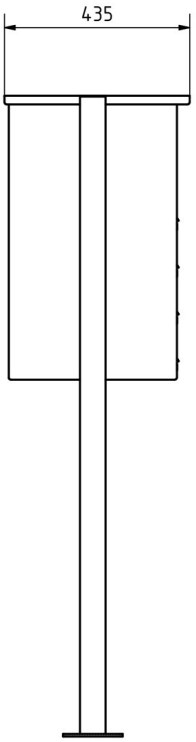

More images





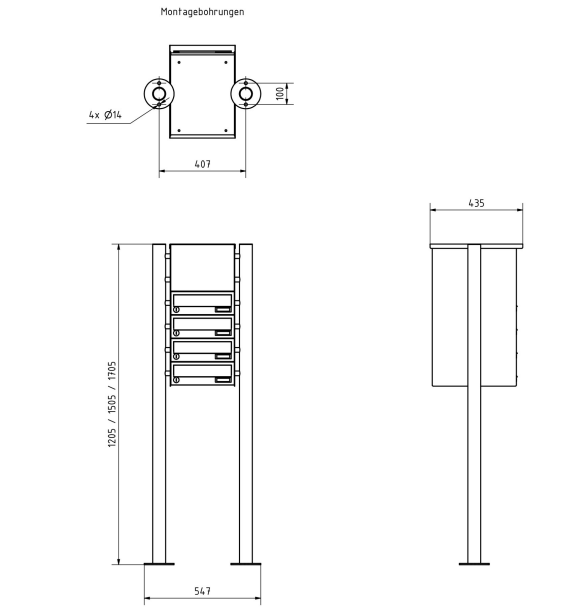



Briefkasten Manufaktur Lippe GmbH
Werler Straße 60
32105 Bad Salzuflen

www.briefkasten-manufaktur.de
info@briefkasten-manufaktur.de
Tel.: +49 5222 807110

Geschäftsführer Oliver Woineck
Ust.ID.Nr. DE303690847
Handelsregister Amtsgericht Lemgo, HRB 8618





Briefkasten Manufaktur Lippe GmbH
Werler Straße 60
32105 Bad Salzuflen

www.briefkasten-manufaktur.de
info@briefkasten-manufaktur.de
Tel.: +49 5222 807110

Geschäftsführer Oliver Woineck
Ust.ID.Nr. DE303690847
Handelsregister Amtsgericht Lemgo, HRB 8618