15 5x3 stainless steel surface-mounted letterbox design BASIC Plus 382XA AP - polished V2A stainless steel | 100mm depth | with 15 mailboxes | Stainless steel, brushed

Product number 382XA-VA-15W-100



Product description

15-unit 5x3 Surface-mounted Stainless Steel Mailbox Design BASIC Plus 382XA AP - Stainless Steel V2A, brushed

High-quality surface-mounted mailbox for 15 households made in Germany by Briefkasten Manufaktur.

The complete surface-mounted mailbox system is made from stainless steel V2A, brushed. The very high-quality workmanship and the well thought-out concept make this mailbox system one of our top sellers. A rain drip edge for optimal water protection, a continuous rubber lip for quiet insertion, the robust interchangeable nameplate, a practical mail retention bar and the very sturdy lock characterise this surface-mounted mailbox system.

The mailbox systems of the BASIC Plus collection are characterised by the consistent use of stainless steel V2A. The result is very high durability and sustainability. The construction has been developed by our own engineers with a focus on high flexibility and modularity, simple replacement-part assembly and uncomplicated self-installation. Spare parts are directly available for all BASIC Plus systems.

Thanks to the design, self-installation is straightforward. The mailbox system is prepared for uncomplicated complete mounting; there is no need for time-consuming installation of individual boxes on the wall.

Briefkasten Manufaktur Lippe GmbH
Werler Straße 60
32105 Bad Salzuflen

www.briefkasten-manufaktur.de
info@briefkasten-manufaktur.de
Tel.: +49 5222 807110

Geschäftsführer Oliver Woineck
Ust.ID.Nr. DE303690847
Handelsregister Amtsgericht Lemgo, HRB 8618

- 15-unit surface-mounted mailbox system with mailboxes made from stainless steel V2A, brushed.
- The system is manufactured by Briefkasten Manufaktur. German quality production "Made in Germany".
- The mailboxes comply with DIN/EN 13724. Slot size (3.5 cm x 32.5 cm) for C4 landscape format; large letters also fit in without folding.
- Mail slot flaps with noise-damping rubber seal for very quiet mail insertion.
- The doors open from left to right.
- Includes 2 keys with key number, interchangeable nameplate beneath the mail slot and a mail retention bar per mailbox.
- Large capacity with optional mailbox depth +50 mm = approx. 17 l. Suitable for businesses and households with very high mail volumes.
- Includes side cladding and rain canopy made from stainless steel V2A, brushed.
- For wall mounting; includes mounting rail and fixings (screws and wall plugs).

Important information:

Mail is only protected from moisture and soiling when fully inserted and the flap is closed. Under certain extreme weather conditions water may nevertheless enter (according to DIN EN 13724 up to 1 cm³). This does not constitute grounds for a complaint.

Product properties

Series	BASIC
Boxes by volume	Normal > 10 litres
Name labelling	Nameplate
Material	Stainless steel V2A 1.4301
Number of boxes	with 15 letterboxes
Removal of mail	On the front
Surface/colour	Brushed
Mounting type	Surface-mounted

Dimensions

Height of single box in mm	330.0
Width of single box in mm	355.0
Capacity in litres	12.0 | 17.0
Height of letterbox slot in mm	35.0
Width of letter slot in mm	325.0
Height of letterbox in mm	990.0
Width of letterbox system in mm	1775.0
Depth in mm	100.0 | 150.0
Weight in kg	68
Delivery condition	Delivered pre-assembled/partially disassembled.

Briefkasten Manufaktur Lippe GmbH
Werler Straße 60
32105 Bad Salzuflen

www.briefkasten-manufaktur.de
info@briefkasten-manufaktur.de
Tel.: +49 5222 807110

Geschäftsführer Oliver Woineck
Ust.ID.Nr. DE303690847
Handelsregister Amtsgericht Lemgo, HRB 8618

More images







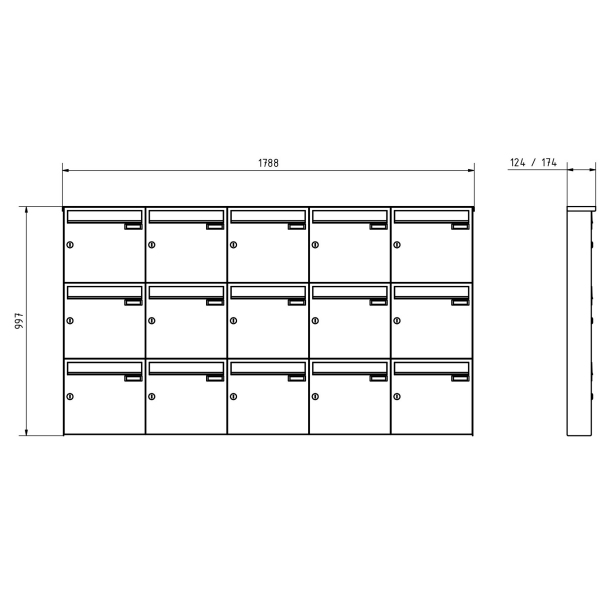

Briefkasten Manufaktur Lippe GmbH
Werler Straße 60
32105 Bad Salzuflen

www.briefkasten-manufaktur.de
info@briefkasten-manufaktur.de
Tel.: +49 5222 807110

Geschäftsführer Oliver Woineck
Ust.ID.Nr. DE303690847
Handelsregister Amtsgericht Lemgo, HRB 8618







Briefkasten Manufaktur Lippe GmbH
Werler Straße 60
32105 Bad Salzuflen

www.briefkasten-manufaktur.de
info@briefkasten-manufaktur.de
Tel.: +49 5222 807110

Geschäftsführer Oliver Woineck
Ust.ID.Nr. DE303690847
Handelsregister Amtsgericht Lemgo, HRB 8618