BASIC letterbox with 3 parcel boxes – flush mounting – RAL colour of your choice

Product number BML3D-F1RYQ8B8PV

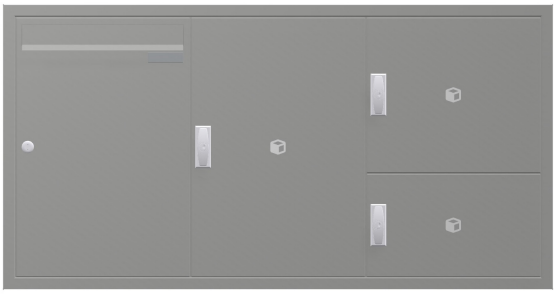

Product description

Letterbox system with parcel reception – thoughtful design for your entrance

The BASIC Horizontal system from Briefkasten Manufaktur welcomes you and your visitors with a clean, uncluttered design. Its modular construction brings your chosen functions together in a clearly arranged, customisable solution for everyday use. The BASIC range offers versatile combinations of letterboxes, accessory boxes and functional modules for a coordinated entrance area. The system is designed for flush mounting and includes a letterbox for daily post. It also incorporates 3 parcel boxes for parcel deliveries.

The system is finished in a RAL colour of your choice and has overall dimensions of W 1162 × H 605 × D 403 mm.

Select ‘Configure now’ to open this exact configuration in the 3D configurator. You can then customise the system further and place your order.

Individually configurable

Design your letterbox system to suit your home: select ‘Configure now’ to adapt this configuration to your requirements.

- Box finish: adjust the colour in the 3D configurator using the colours available for this version.
- Personalised lettering: customise the designated areas with your own names, house numbers or text of your choice. Any lettering shown is an example and can be replaced.
- Lettering style: choose from the fonts available for lettering and adjust the appearance in the configurator.
- Equipment: add or change compatible components from the selection currently available for the system.

When you make individual changes, the dimensions and price are recalculated in the 3D configurator to reflect your selection.

Flush-mount trim frame

Briefkasten Manufaktur Lippe GmbH
Werler Straße 60
32105 Bad Salzuflen

www.briefkasten-manufaktur.de
info@briefkasten-manufaktur.de
Tel.: +49 5222 807110

Geschäftsführer Oliver Woineck
Ust.ID.Nr. DE303690847
Handelsregister Amtsgericht Lemgo, HRB 8618

The flush-mounted system is fitted with a trim frame made from 1,5 mm thick V2A stainless steel. The frame covers the transition between the installation opening and the wall surface, providing a neat finish.

Additional space for parcels, newspapers and more

As a parcel box, this compartment complements letter delivery by accepting parcels even when you are not at home. The selected BASIC series parcel lock with T-handle allows deliveries without giving the courier a key. You use your key to release the compartment for a single delivery. The courier opens the released compartment, places the parcel inside, closes the door and pushes the lock in to secure it. To collect your parcel, you open the compartment with your key and then release it again for the next delivery. Until then, it is not available for further keyless deliveries. The external box dimensions are 370 × 550 × 385 mm (W × H × D), 370 × 330 × 385 mm (W × H × D) and 370 × 220 × 385 mm (W × H × D). The clear door opening and usable internal dimensions determine which parcel sizes will fit; the external dimensions do not indicate the maximum parcel size. Please check the parcel size against the internal compartment dimensions in advance.

Materials and workmanship

Base material: V2A 1.4301 stainless steel. The V2A stainless steel provides a corrosion-resistant, durable foundation for the entrance area.

The powder-coated surface is finished in a RAL colour of your choice. Select your preferred colour in the 3D configurator.

Letterbox and ease of use

Letterbox 370 × 550 × 385 mm: includes a rainwater run-off edge for optimum protection against water, a continuous rubber lip for quiet posting, a sturdy replaceable nameplate and a highly robust lock. The height of the posting slot and a narrowing of the chute nevertheless protect the post against unauthorised removal.

Door communication and equipment

BASIC plastic nameplate, type 2: nameplate made from crystal-clear polycarbonate. The insert can be replaced from the front.

Features of this letterbox system

- Product range: BASIC Horizontal
- Installation: flush mounting
- Finish: RAL colour of your choice
- Overall dimensions: W 1162 × H 605 × D 403 mm
- 1 letterbox, 3 accessory boxes
- Box finish: RAL colour of your choice
- Base material: V2A 1.4301 stainless steel. Finish: powder coating or brushed stainless steel

Important information:

Protection against water: a sheltered location, ideally beneath a canopy, helps protect your post. Mail should be pushed all the way in and the letter flap should be closed.

Installation: check the mounting surface and installation conditions against the overall dimensions and installation instructions.

Briefkasten Manufaktur Lippe GmbH
Werler Straße 60
32105 Bad Salzuflen

www.briefkasten-manufaktur.de
info@briefkasten-manufaktur.de
Tel.: +49 5222 807110

Geschäftsführer Oliver Woineck
Ust.ID.Nr. DE303690847
Handelsregister Amtsgericht Lemgo, HRB 8618

Product properties

Series	BASIC
Functions	Parcel compartment
Number of boxes	with 3 parcel boxes, with 1 letterbox
Name labelling	Nameplate
Material	Stainless steel V2A 1.4301
Removal of mail	On the front
Surface/colour	RAL of your choice (according to colour table)
Mounting type	Flush-mounted

Briefkasten Manufaktur Lippe GmbH
Werler Straße 60
32105 Bad Salzuflen

www.briefkasten-manufaktur.de
info@briefkasten-manufaktur.de
Tel.: +49 5222 807110

Geschäftsführer Oliver Woineck
Ust.ID.Nr. DE303690847
Handelsregister Amtsgericht Lemgo, HRB 8618

Dimensions

Height of single box in mm	550
Width of single box in mm	370
Overall height in mm	605
Total width in mm	1162
Depth in mm	403

Dimension drawing

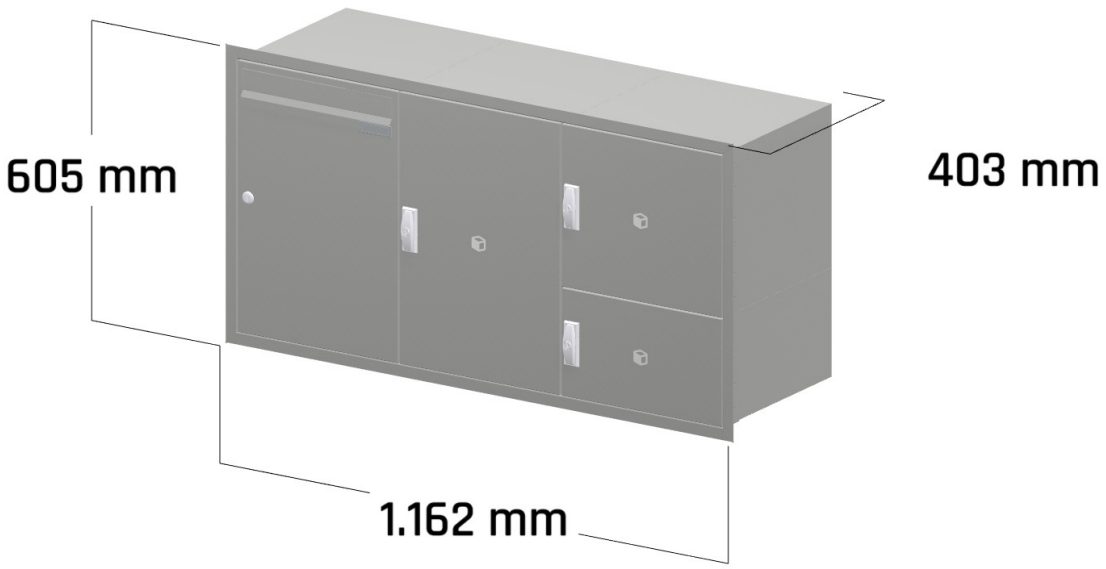

Briefkasten Manufaktur Lippe GmbH
Werler Straße 60
32105 Bad Salzuflen

www.briefkasten-manufaktur.de
info@briefkasten-manufaktur.de
Tel.: +49 5222 807110

Geschäftsführer Oliver Woineck
Ust.ID.Nr. DE303690847
Handelsregister Amtsgericht Lemgo, HRB 8618

More images

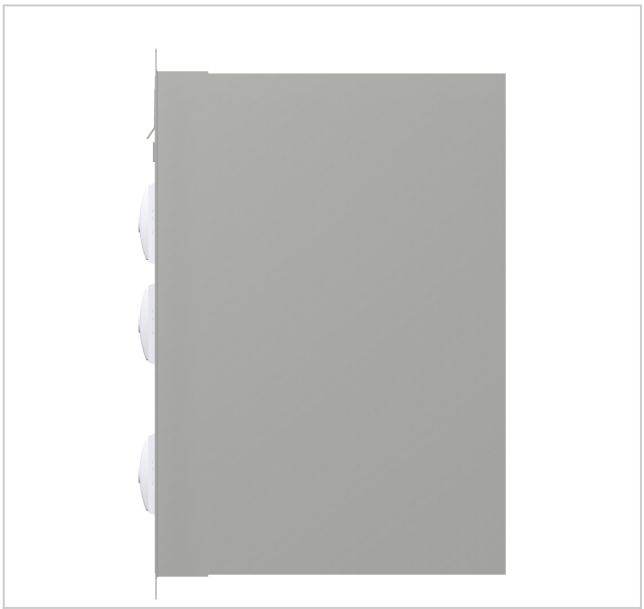



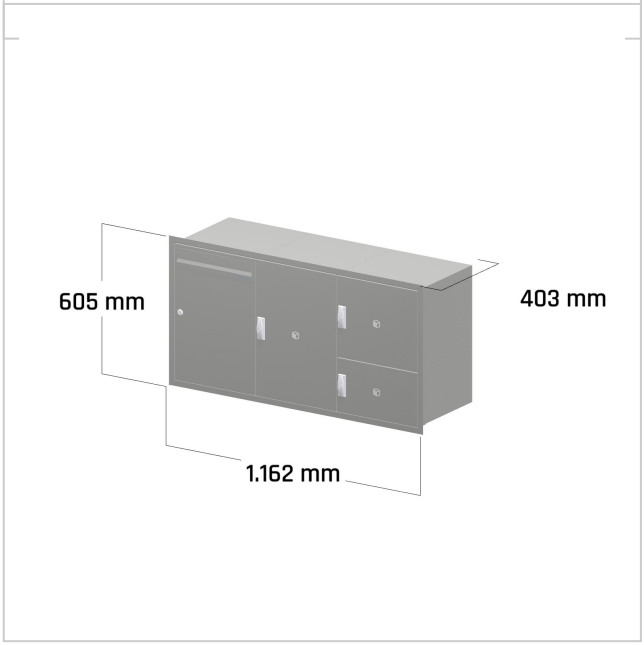

Briefkasten Manufaktur Lippe GmbH
Werler Straße 60
32105 Bad Salzuflen

www.briefkasten-manufaktur.de
info@briefkasten-manufaktur.de
Tel.: +49 5222 807110

Geschäftsführer Oliver Woineck
Ust.ID.Nr. DE303690847
Handelsregister Amtsgericht Lemgo, HRB 8618