4-unit 2x2 design freestanding mailbox GOETHE ST-R - RAL colour of your choice | 100mm depth | with 4 mailboxes

Product number 215-STR-4



Product description

4-unit 2x2 design freestanding letterbox GOETHE ST-R - RAL of your choice

High-quality manufactured 4-party freestanding letterbox with elegant round-tube support elements. The modern GOETHE letterbox is ideal for an upscale entrance area. The linear design without a visible lock gives this letterbox an especially elegant appearance.

The dimensions of the individual boxes provide a capacity of approx. 16 litres; the large slot ensures that DIN C4 envelopes and magazines — or mail accumulated during several days' absence — are not crumpled. The innovative push-key lock is concealed inside the letterbox. The key is simply inserted into the existing opening (no turning required) and the door opens. With the lock arrangement, this letterbox is designed so that the collection door prevents the post from falling out. Thanks to the water runoff edge, the mail stored inside is optimally protected from the weather. The flap is fitted with high-quality axle dampers, ensuring a quiet closing and preventing rattling caused by weather. The replaceable nameplates made of acrylic glass can be conveniently operated from the front; for an optimal appearance we recommend the flush-mounted nameplate with laser engraving (see Accessories). The second nameplate features an advertising Yes/No insert.

The mailbox systems of the GOETHE collection are characterised by the consistent use of stainless steel and aluminium. The result is very high durability and sustainability. The construction has been developed by our own engineers with a focus on high flexibility and modularity, easy spare-part assembly and straightforward self-assembly. Spare parts for all GOETHE systems are available directly in our shop.

Thanks to the design, self-assembly is straightforward.

Protected utility model according to DPMA file reference DE: 20 2021 101 679.5

Briefkasten Manufaktur Lippe GmbH
Werler Straße 60
32105 Bad Salzuflen

www.briefkasten-manufaktur.de
info@briefkasten-manufaktur.de
Tel.: +49 5222 807110

Geschäftsführer Oliver Woineck
Ust.ID.Nr. DE303690847
Handelsregister Amtsgericht Lemgo, HRB 8618

- 4-unit freestanding letterbox made of stainless steel and aluminium.
- Letterboxes made of stainless steel 1.4016 (non-rusting magnetic stainless steel), powder-coated in RAL of your choice.
- Quality manufacturing - Made in Germany by Briefkasten Manufaktur Lippe.
- Innovative push-key lock with 2 keys per unit.
- Letters are inserted and retrieved from the front. Insertion flap with high-quality axle dampers for very quiet mail insertion.
- The letterboxes comply with DIN/EN 13724. Insertion size (3.5 cm x 36.0 cm) for C4 landscape; large letters also fit without bending.
- Collection doors open from top to bottom, preventing the post from falling out towards you.
- Nameplate made of acrylic glass for name inscription and a second nameplate with advertising Yes/No per unit.
- Optional house number labelling approx. 70–80 mm high.
- Optimal protection from rain thanks to rain runoff edges and a rain hood made of 3 mm aluminium AlMg3 W19, powder-coated in RAL of your choice.
- Side cladding made of 3 mm aluminium AlMg3 W19, powder-coated in RAL of your choice.
- Rear panel made of 1 mm stainless steel V2A 1.4301, powder-coated in RAL of your choice.
- The support posts consist of 60.3 mm stainless steel V2A 1.4301, brushed, for screw mounting or for embedding in concrete.

Important information:

To achieve optimal protection of your post from water, the letterbox or letterbox system should, if possible, be located under an overhang.

Postal items are protected from water only when they are placed fully inside the box and the insertion flap is closed. Partially inserted mail allows moisture and dirt to enter the letterbox. This system is protected against water ingress according to DIN EN 13724. Water ingress is not a valid reason for a complaint.

Product properties

Surface/colour	RAL 9005 deep black, RAL 3004 crimson red, DB 703 iron mica, RAL 7016 anthracite grey, RAL of your choice (according to colour table), RAL 9007 grey aluminium, RAL 9016 traffic white
Series	GOETHE
Number of boxes	with 4 letterboxes
Name labelling	Nameplate
Material	Aluminium AlMg3 W19, Stainless steel V2A 1.4301, Stainless steel 1.4016 (non-rusting magnetic stainless steel)
Mounting type	Free-standing
Removal of mail	On the front
Boxes by volume	Large > 16 litres

Briefkasten Manufaktur Lippe GmbH
Werler Straße 60
32105 Bad Salzuflen

www.briefkasten-manufaktur.de
info@briefkasten-manufaktur.de
Tel.: +49 5222 807110

Geschäftsführer Oliver Woineck
Ust.ID.Nr. DE303690847
Handelsregister Amtsgericht Lemgo, HRB 8618

Dimensions

Height of single box in mm	400,0
Width of single box in mm	400,0
Capacity in litres	16
Height of letterbox slot in mm	35,0
Width of letter slot in mm	360,0
Height of letterbox in mm	800,0
Width of letterbox system in mm	800,0
Overall height in mm	1200,0 | 1500,0 | 1700,0
Total width in mm	970,0
Depth in mm	100.0 + 25.0 Rain roof
Weight in kg	43
Delivery condition	Supplied in blocks, stand elements / letterbox divided

Dimension drawing

Briefkasten Manufaktur Lippe GmbH
Werler Straße 60
32105 Bad Salzuflen

www.briefkasten-manufaktur.de
info@briefkasten-manufaktur.de
Tel.: +49 5222 807110

Geschäftsführer Oliver Woineck
Ust.ID.Nr. DE303690847
Handelsregister Amtsgericht Lemgo, HRB 8618

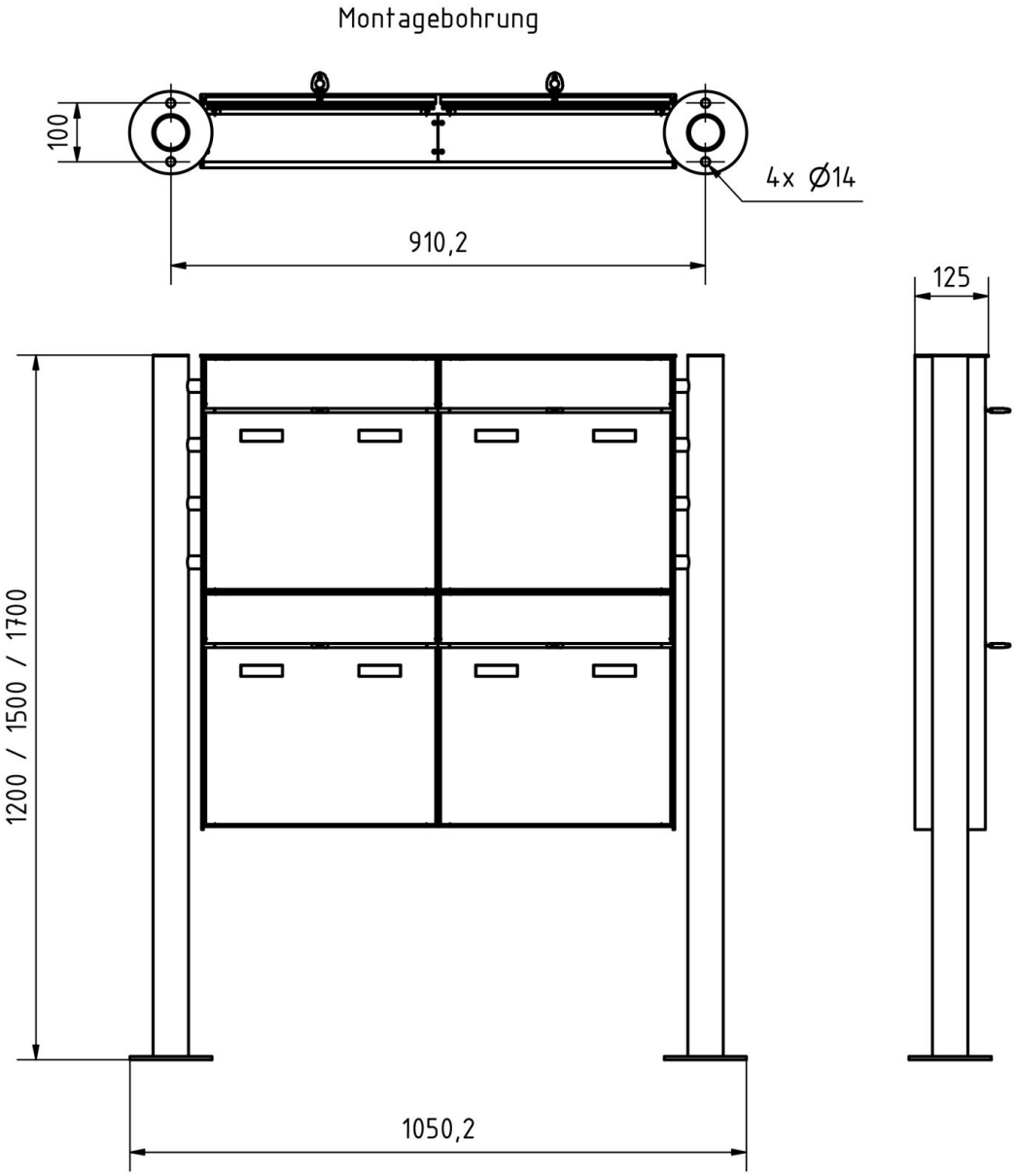

Briefkasten Manufaktur Lippe GmbH
Werler Straße 60
32105 Bad Salzuflen

www.briefkasten-manufaktur.de
info@briefkasten-manufaktur.de
Tel.: +49 5222 807110

Geschäftsführer Oliver Woineck
Ust.ID.Nr. DE303690847
Handelsregister Amtsgericht Lemgo, HRB 8618

More images

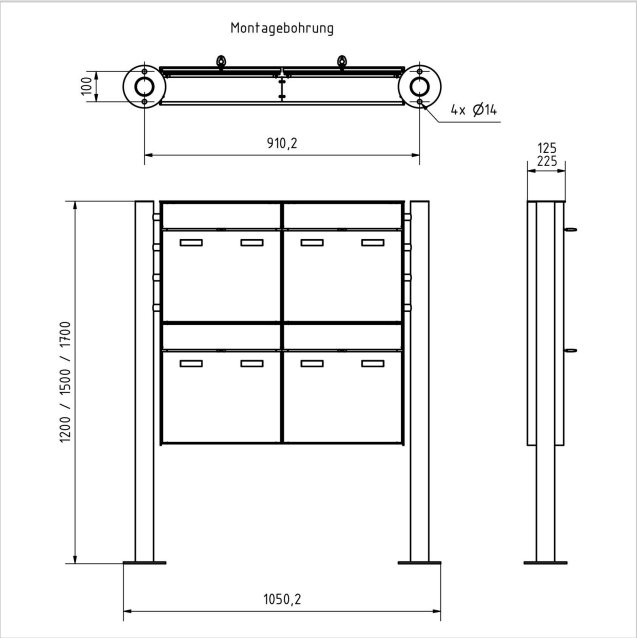







Briefkasten Manufaktur Lippe GmbH
Werler Straße 60
32105 Bad Salzuflen

www.briefkasten-manufaktur.de
info@briefkasten-manufaktur.de
Tel.: +49 5222 807110

Geschäftsführer Oliver Woineck
Ust.ID.Nr. DE303690847
Handelsregister Amtsgericht Lemgo, HRB 8618









Briefkasten Manufaktur Lippe GmbH
Werler Straße 60
32105 Bad Salzuflen

www.briefkasten-manufaktur.de
info@briefkasten-manufaktur.de
Tel.: +49 5222 807110

Geschäftsführer Oliver Woineck
Ust.ID.Nr. DE303690847
Handelsregister Amtsgericht Lemgo, HRB 8618



Briefkasten Manufaktur Lippe GmbH
Werler Straße 60
32105 Bad Salzuflen

www.briefkasten-manufaktur.de
info@briefkasten-manufaktur.de
Tel.: +49 5222 807110

Geschäftsführer Oliver Woineck
Ust.ID.Nr. DE303690847
Handelsregister Amtsgericht Lemgo, HRB 8618