# 6-piece stainless steel flush-mounted letterbox system BASIC Plus 382XU UP with bell box on the side - RAL of your choice | Left | 100mm depth | ? Colour of your choice | with 6 letterboxes

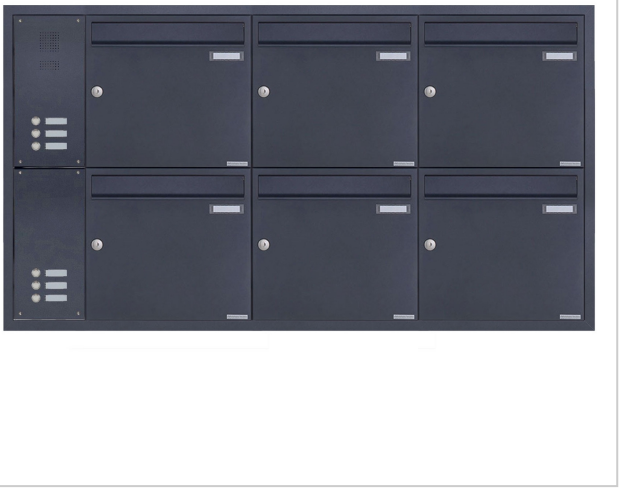

**Product number** 382XU-6-SPS-L-100

## Product description

### 6-unit stainless steel flush-mounted mailbox system BASIC Plus 382XU UP with side bell box - RAL colour of your choice

Modern flush-mounted mailbox for 6 households - made in Germany by Briefkasten Manufaktur.

The mailbox is made entirely from stainless steel V2A, powder-coated in a RAL colour. The very high-quality workmanship and the thoughtful concept make this flush-mounted mailbox one of our top sellers. A rain drainage edge for optimal water protection, a continuous rubber lip for quiet insertion, the solid interchangeable nameplate, a practical mail retention bracket and the very robust lock characterise this flush-mounted mailbox. The flush-mounted frame made of stainless steel V2A is equipped with a foam rubber seal and guarantees very high durability.

The mailbox systems of the BASIC Plus collection are characterised by the consistent use of stainless steel V2A. The result is very high durability and sustainability. The construction has been developed by our own engineers with a view to high flexibility/modularity, easy spare-part assembly and straightforward self-installation. Spare parts are directly available for all BASIC Plus systems.

Briefkasten Manufaktur Lippe GmbH
Werler Straße 60
32105 Bad Salzuflen

www.briefkasten-manufaktur.de
info@briefkasten-manufaktur.de
Tel.: +49 5222 807110

Geschäftsführer Oliver Woineck
Ust.ID.Nr. DE303690847
Handelsregister Amtsgericht Lemgo, HRB 8618

- **6-unit flush-mounted mailbox system made entirely from stainless steel V2A 1.4301, powder-coated in a RAL colour**
- The system is manufactured by Briefkasten Manufaktur. German quality production "Made in Germany".
- The mailboxes conform to DIN/EN 13724. Letter slot size (3.5 cm x 32.5 cm) for C4 landscape; large letters fit in without bending.
- Drop flap with noise-damping rubber seal for very quiet mail insertion.
- The door opens from left to right.
- Incl. 2 keys with key number, interchangeable nameplate (Type 2) under the letter slot and mail retention bracket.
- Large capacity through optional mailbox depth +50 mm = approx. 17 l. Suitable for businesses and households with very high mail volumes.
- **Bell box made of stainless steel V2A 1.4301, powder-coated in a fine-structure matt RAL colour**
- Intercom cut-out with universal adapter. (Intercom system/flush-mounted loudspeaker not included). Optionally also available without intercom cut-out.
- The universal adapter is suitable for all commercially available flush-mounted loudspeakers (Siedle, Ritto, TCS, Busch-Jaeger, Gira, Legrand Bticino, ELCOM, Auerswald, Comelit etc.).
- Round stainless-steel doorbell push-button type: Grothe Protact, max. 24 V AC/DC, 1.5 A, IP54 (pressure force limitation).
- Anti-vandalism - the nameplate is dent-proof and impact-resistant; the plastic is flame-retardant.
- Plaster cover frame made from stainless-steel angle profile 25 x 58 mm, powder-coated in a RAL colour.

**Important information**

Camera or intercom preparation

**Intercom systems must be connected by an electrician. For planning, installation and commissioning, please consult the electrician of your choice.**

Water protection

Mail is only protected from moisture and dirt if fully inserted and with the flap closed. Under certain extreme weather conditions, water may still enter (according to DIN EN 13724 up to 1 $cm^3$). This does not constitute a reason for complaint.

Briefkasten Manufaktur Lippe GmbH
Werler Straße 60
32105 Bad Salzuflen

www.briefkasten-manufaktur.de
info@briefkasten-manufaktur.de
Tel.: +49 5222 807110

Geschäftsführer Oliver Woineck
Ust.ID.Nr. DE303690847
Handelsregister Amtsgericht Lemgo, HRB 8618

## Product properties

| | |
|---|---|
| **Surface/colour** | RAL 9005 deep black, RAL 3004 crimson red, DB 703 iron mica, RAL 7016 anthracite grey, RAL of your choice (according to colour table), RAL 9007 grey aluminium, RAL 9016 traffic white |
| **Series** | BASIC |
| **Number of bell push buttons** | 6 buttons |
| **Functions** | Light button, Intercom |
| **Functional box prepared for manufacturer** | GIRA, Busch Jaeger, Siedle, STR Elektronik, ELCOM, TCS, Ritto, ALGO, Telegärtner, Auerswald, Legrand Bticino, Comelit |
| **Number of boxes** | with 6 letterboxes |
| **Boxes by volume** | Normal > 10 litres |
| **Name labelling** | Nameplate |
| **Material** | Stainless steel V2A 1.4301 |
| **Removal of mail** | On the front |
| **Mounting type** | Flush-mounted |

## Dimensions

| | |
|---|---|
| **Height of single box in mm** | 330.0 |
| **Width of single box in mm** | 355.0 |
| **Capacity in litres** | 12.0 \| 17.0 |
| **Height of letterbox slot in mm** | 35.0 |
| **Width of letter slot in mm** | 325.0 |
| **Height of letterbox in mm** | 710.0 |
| **Width of letterbox system in mm** | 1285.0 |
| **Total width in mm** | 1285.0 |
| **Depth in mm** | 100.0 \| 150.0 |
| **Weight in kg** | 40 |
| **Delivery condition** | Delivered fully assembled |

Briefkasten Manufaktur Lippe GmbH
Werler Straße 60
32105 Bad Salzuflen

www.briefkasten-manufaktur.de
info@briefkasten-manufaktur.de
Tel.: +49 5222 807110

Geschäftsführer Oliver Woineck
Ust.ID.Nr. DE303690847
Handelsregister Amtsgericht Lemgo, HRB 8618

# More images





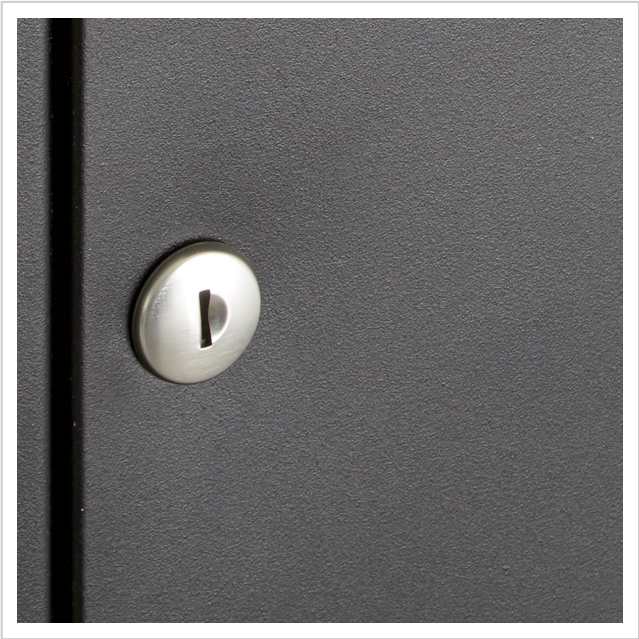




Briefkasten Manufaktur Lippe GmbH
Werler Straße 60
32105 Bad Salzuflen

www.briefkasten-manufaktur.de
info@briefkasten-manufaktur.de
Tel.: +49 5222 807110

Geschäftsführer Oliver Woineck
Ust.ID.Nr. DE303690847
Handelsregister Amtsgericht Lemgo, HRB 8618





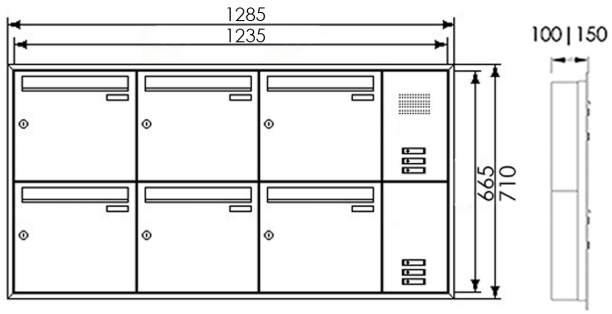


Briefkasten Manufaktur Lippe GmbH
Werler Straße 60
32105 Bad Salzuflen

www.briefkasten-manufaktur.de
info@briefkasten-manufaktur.de
Tel.: +49 5222 807110

Geschäftsführer Oliver Woineck
Ust.ID.Nr. DE303690847
Handelsregister Amtsgericht Lemgo, HRB 8618